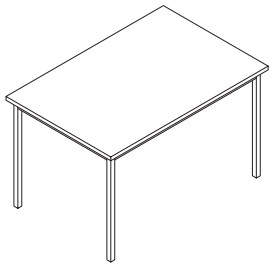

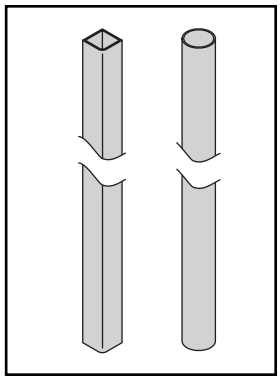

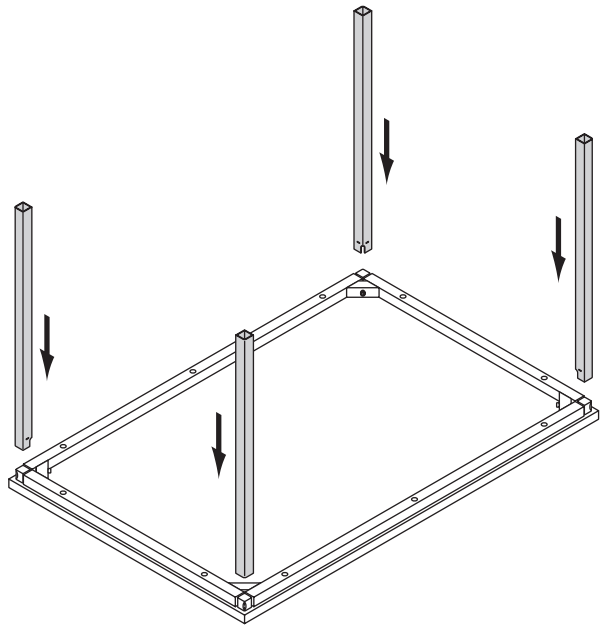

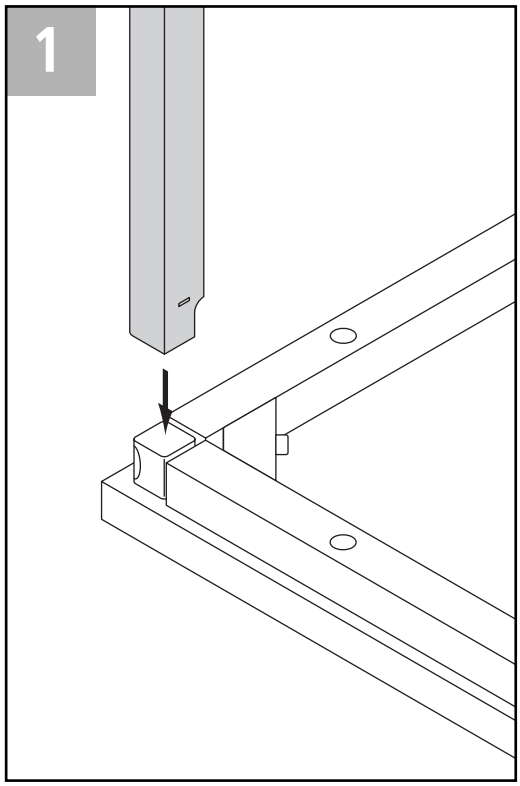
1

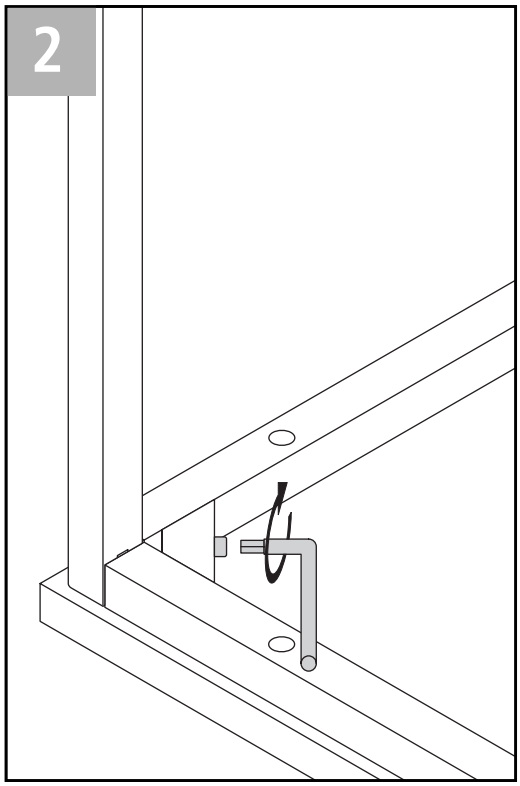
2