Smokers CEASE-FIRE®

JUSTRITE®

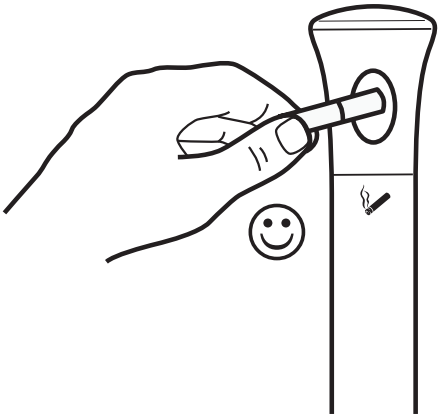

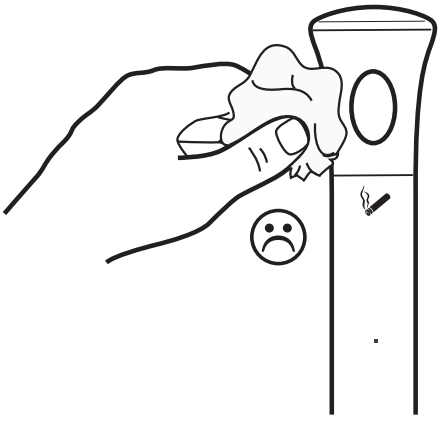

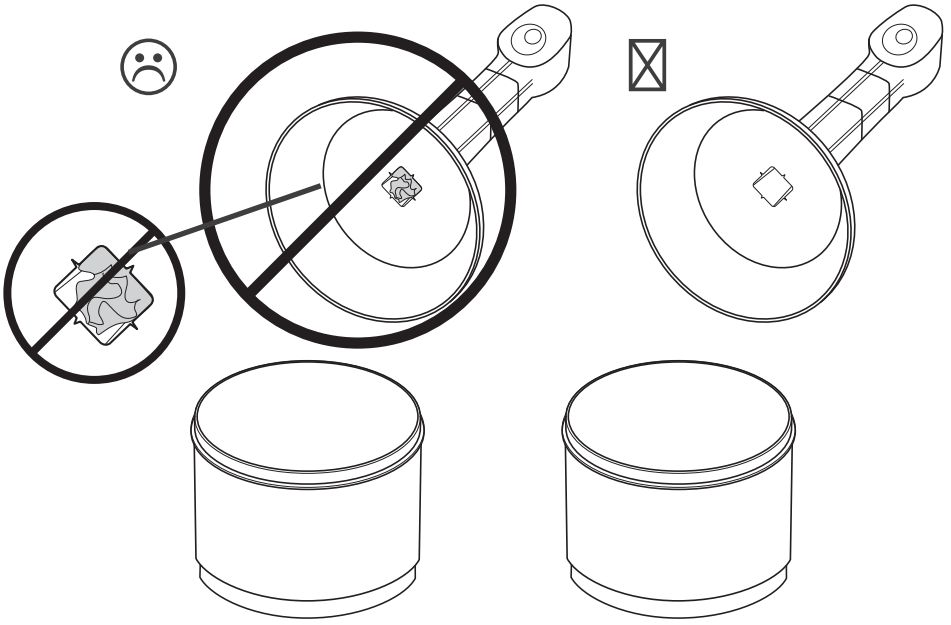

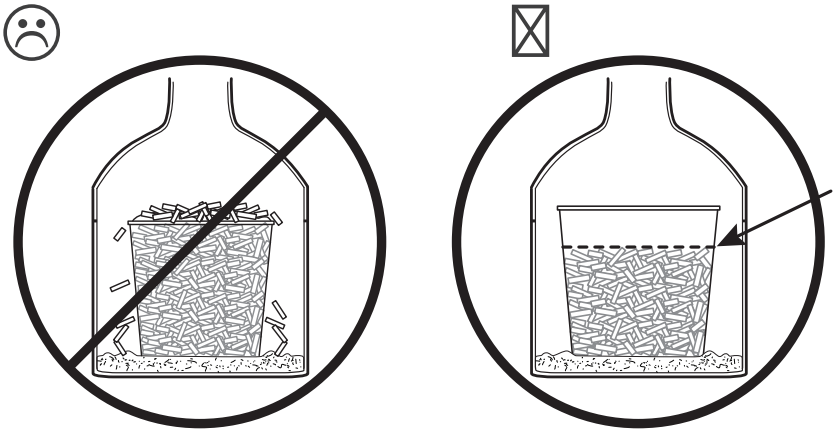

www.justritemfg.com

Justrite North America 1-800-798-9250
Justrite Europe 1-217-238-5077
Justrite Asia 011+86-756-322-9909

custserv@justritemfg.com
internationalcs@justritemfg.com
internationalcs@justritemfg.com

©2011 Justrite Mfg. Co., LLC

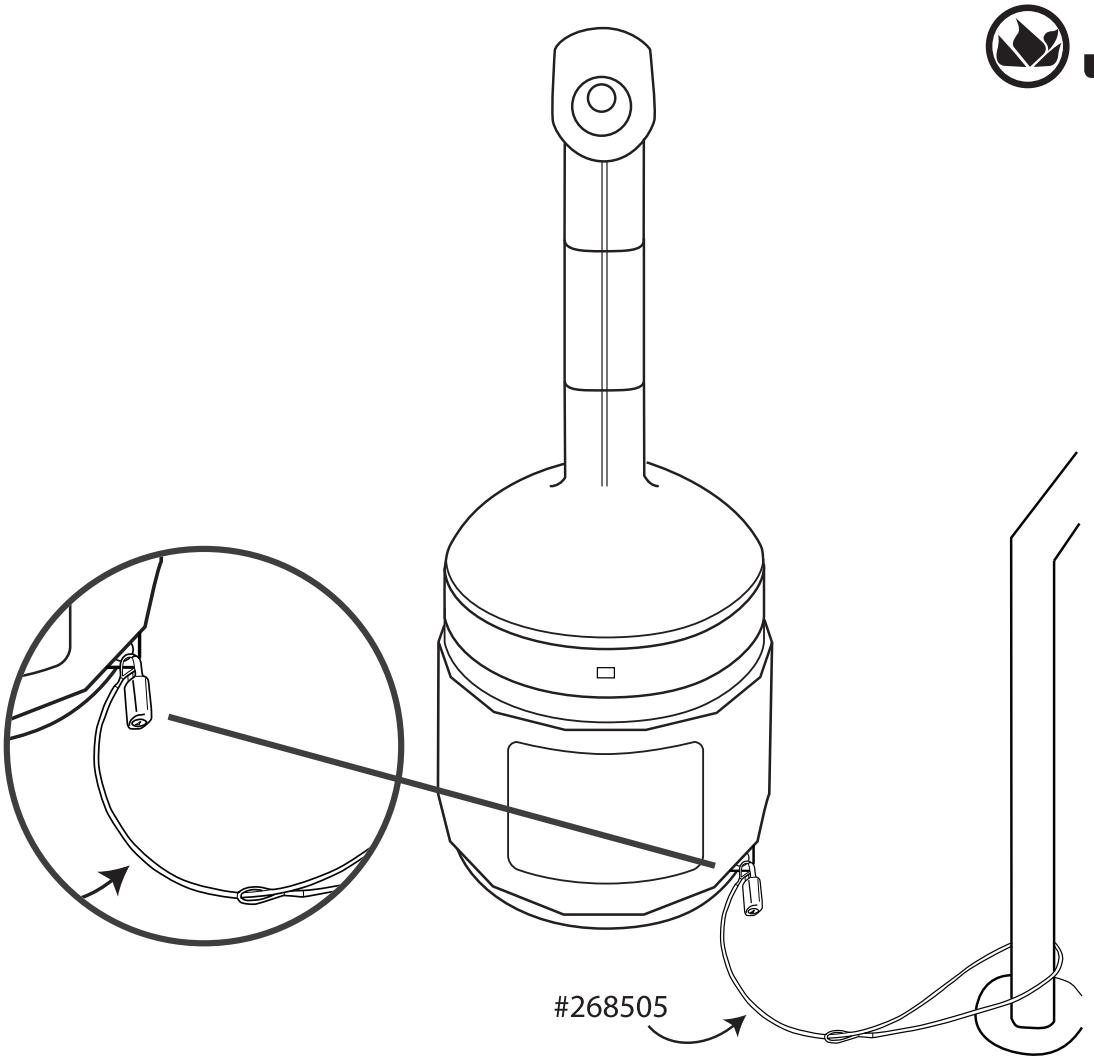

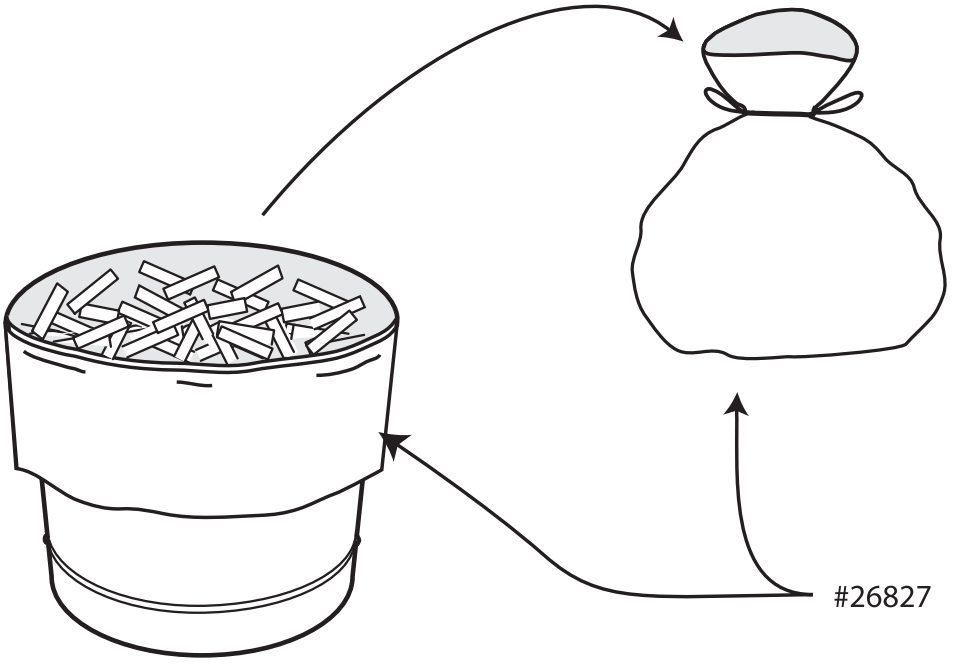

www.justritemfg.com

Justrite North America 1-800-798-9250 custserv@justritemfg.com
Justrite Europe 1-217-238-5077 internationalcs@justritemfg.com
Justrite Asia 011+86-756-322-9909 internationalcs@justritemfg.com

©2011 Justrite Mfg. Co., LLC