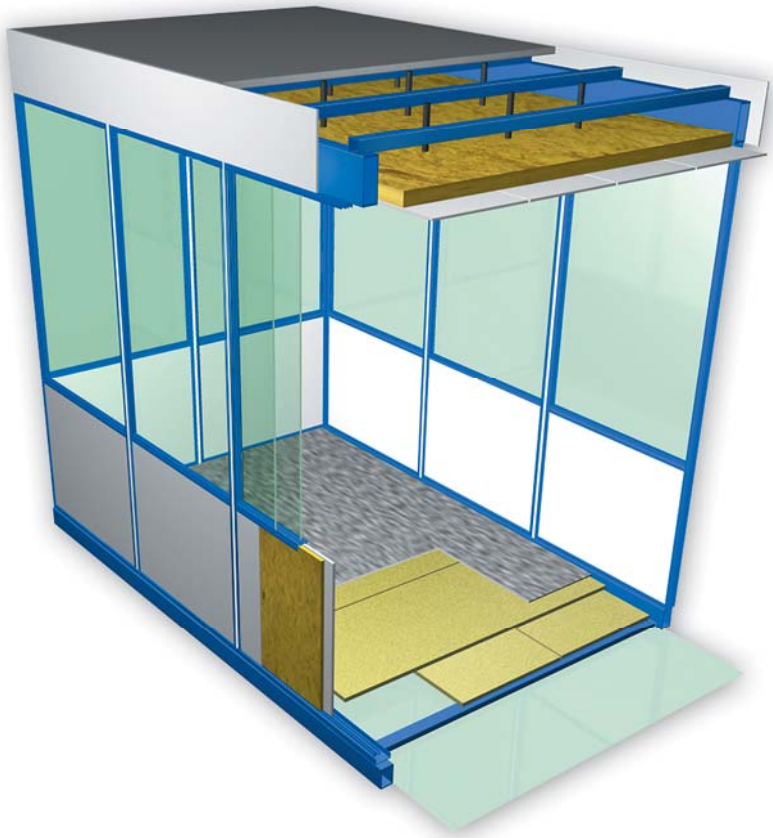

MDS
Raumsysteme

MDS Raumsysteme

① 4,2x 16 mm

② 4,5 x 25 mm

③ 4,5 x 35 mm

④ 5 x 50 mm

⑤ 6 x 40 mm

⑥ 10 x 50 mm

⑦ 4 x 10 mm

⑧ 15 x 14 mm

⑨ 40 x 40 mm

⑩ 42 x 14 mm

⑪ 60 x 60 x 40 mm

⑫ 20 mm

⑬ 10 x 140 mm

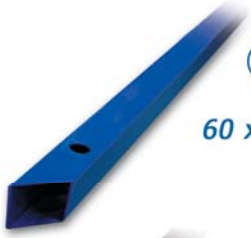

Ⓐ 60 x 40 mm

Ⓑ 40 x 20 mm

Ⓒ

Ⓓ

Ⓔ

Ⓕ

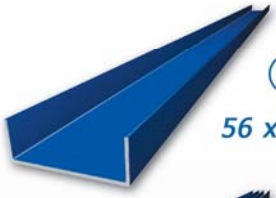

Ⓖ 56 x 20 mm

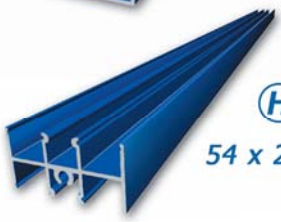

Ⓗ 54 x 28 mm

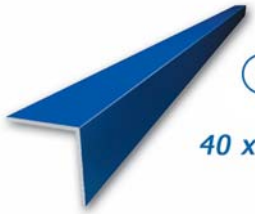

Ⓘ 40 x 40 mm

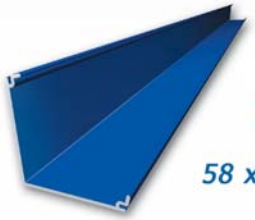

Ⓙ 58 x 58 mm

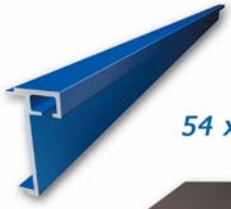

Ⓚ 54 x 27 mm

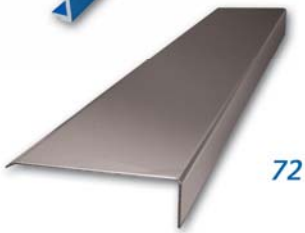

Ⓛ 72 x 20 mm

Ⓜ

Ⓝ 120 x 30 mm

Ⓞ

Ⓟ

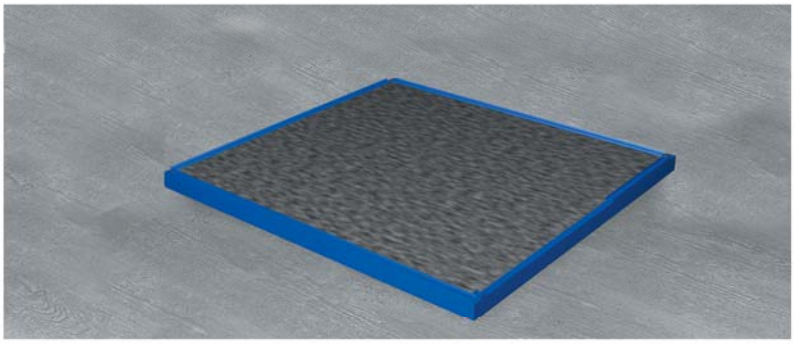

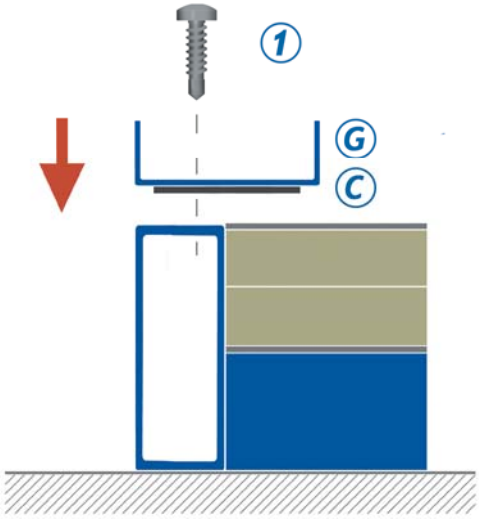
1
G
C

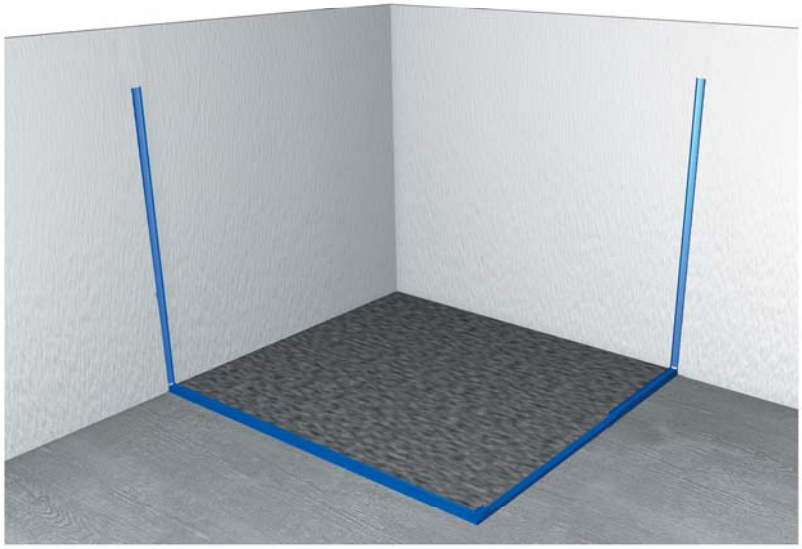

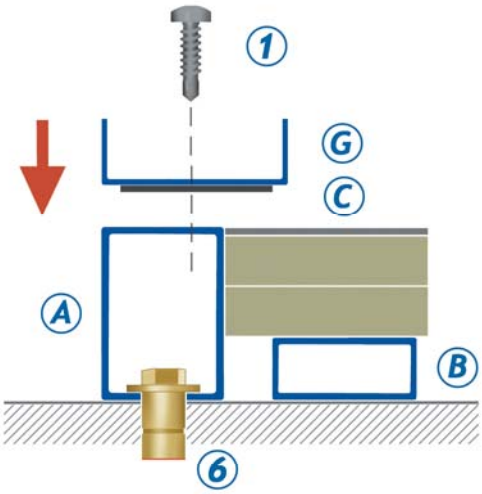
1
G
C
A
B
6

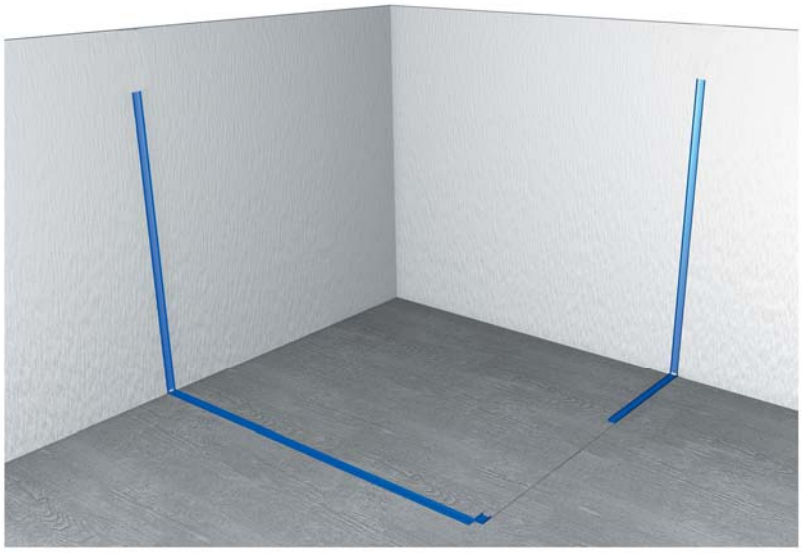

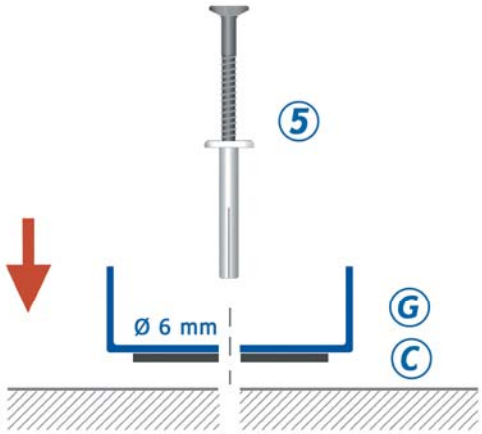
5
Ø 6 mm
G
C

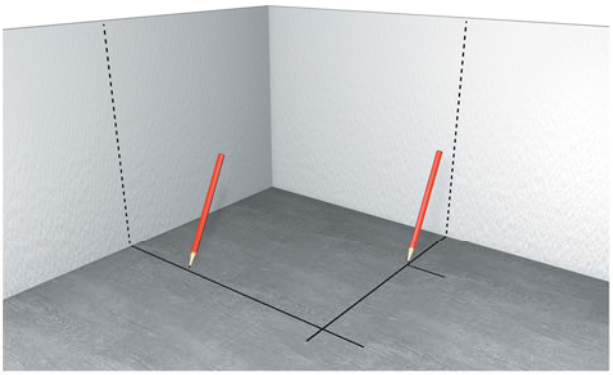

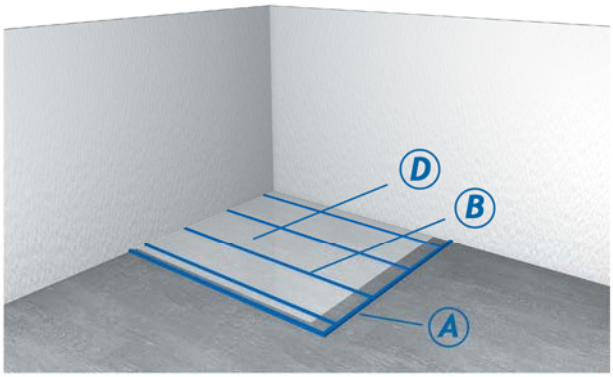

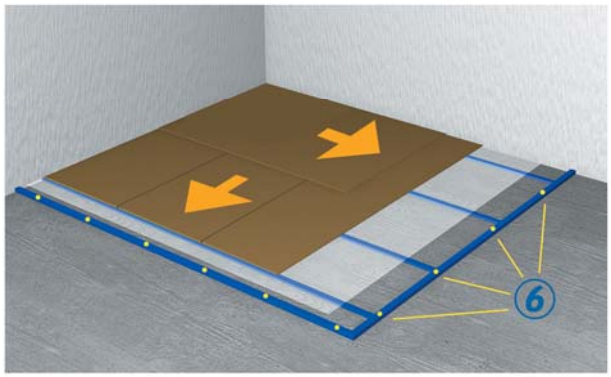

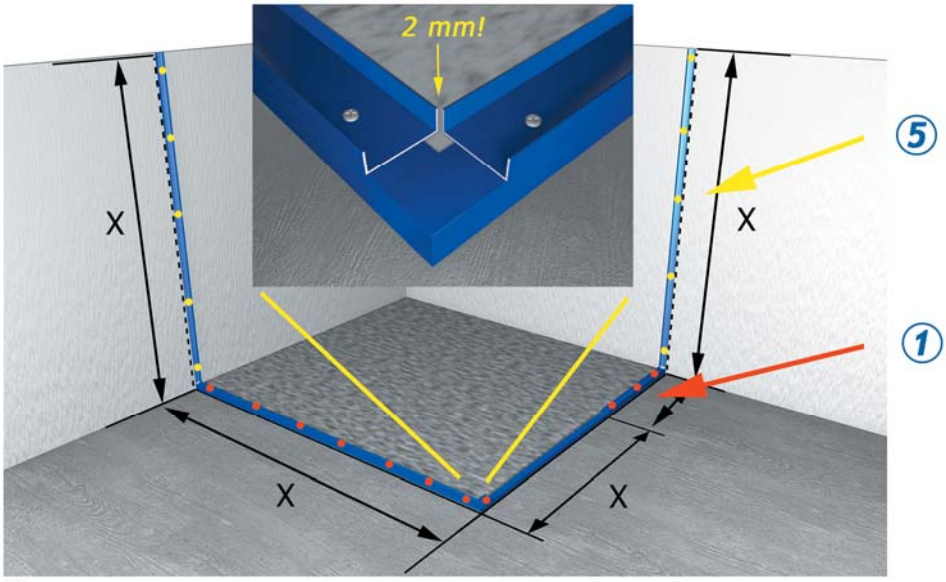

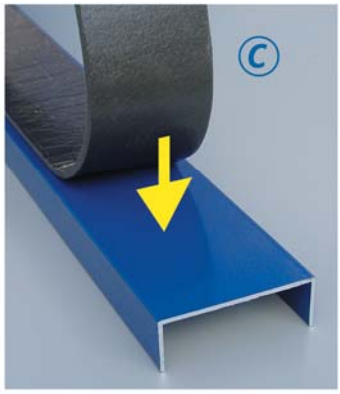

X=

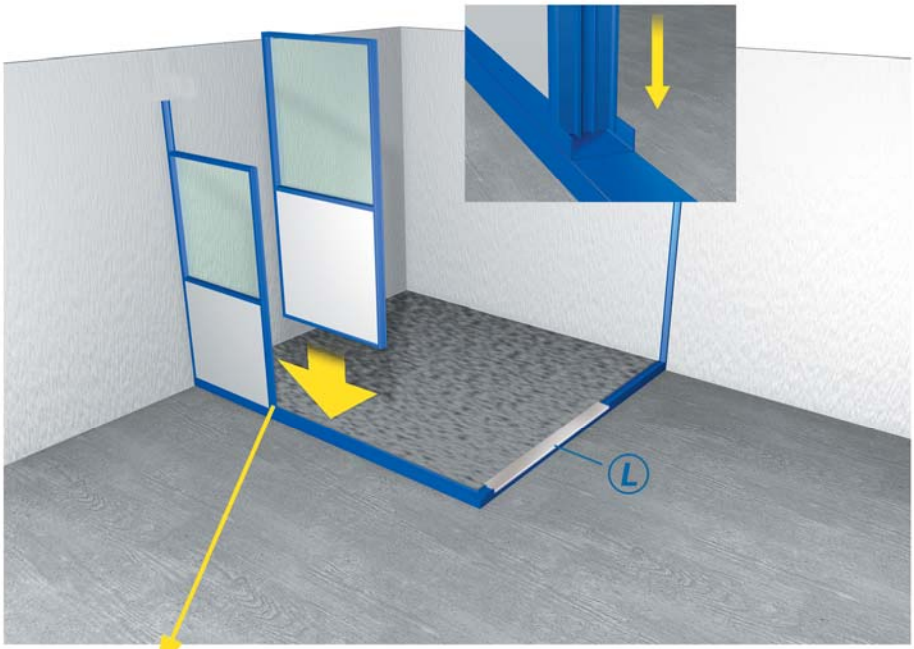
L

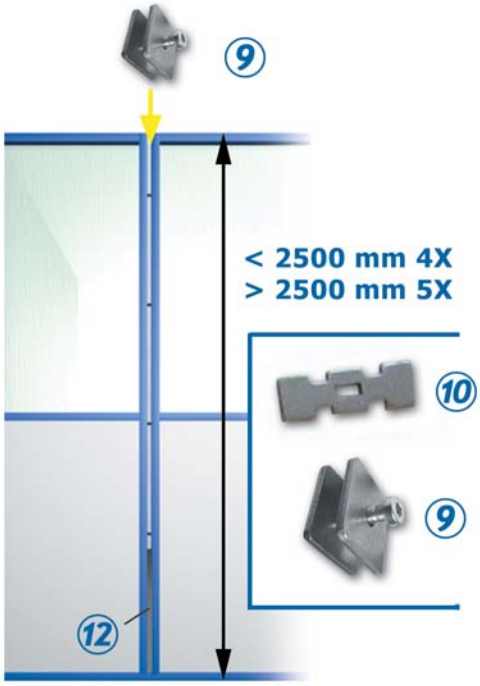
9
< 2500 mm 4X
> 2500 mm 5X
10
9
12

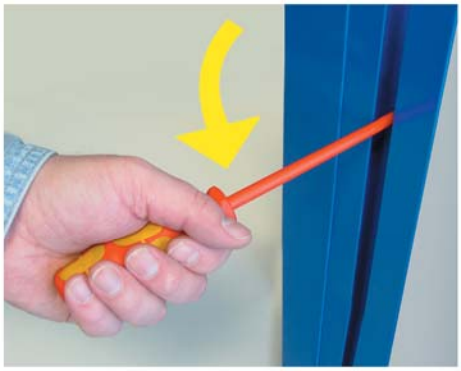

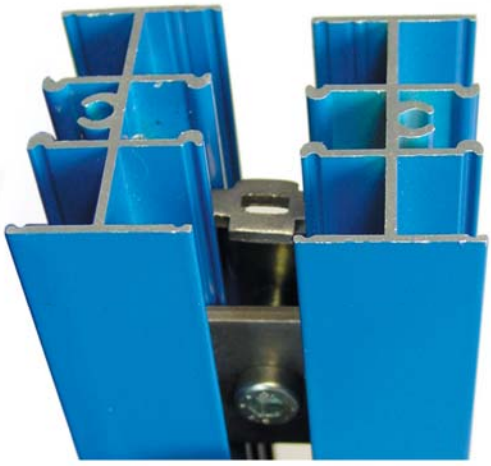

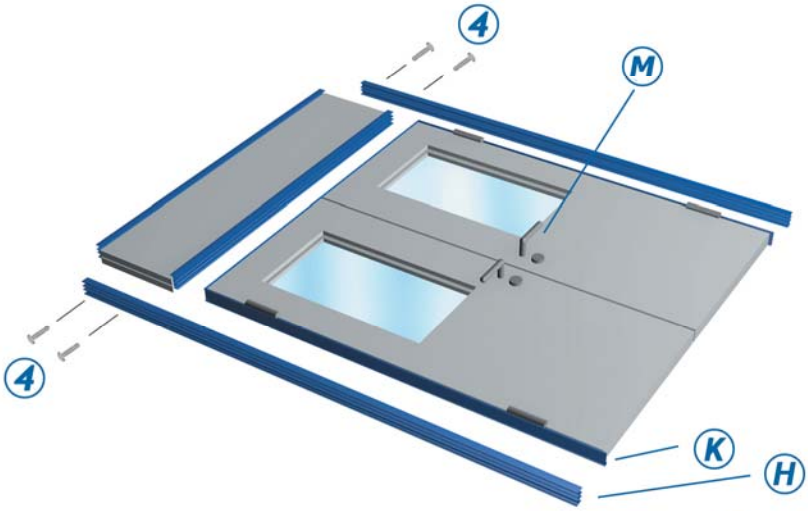
4
M
4
K
H

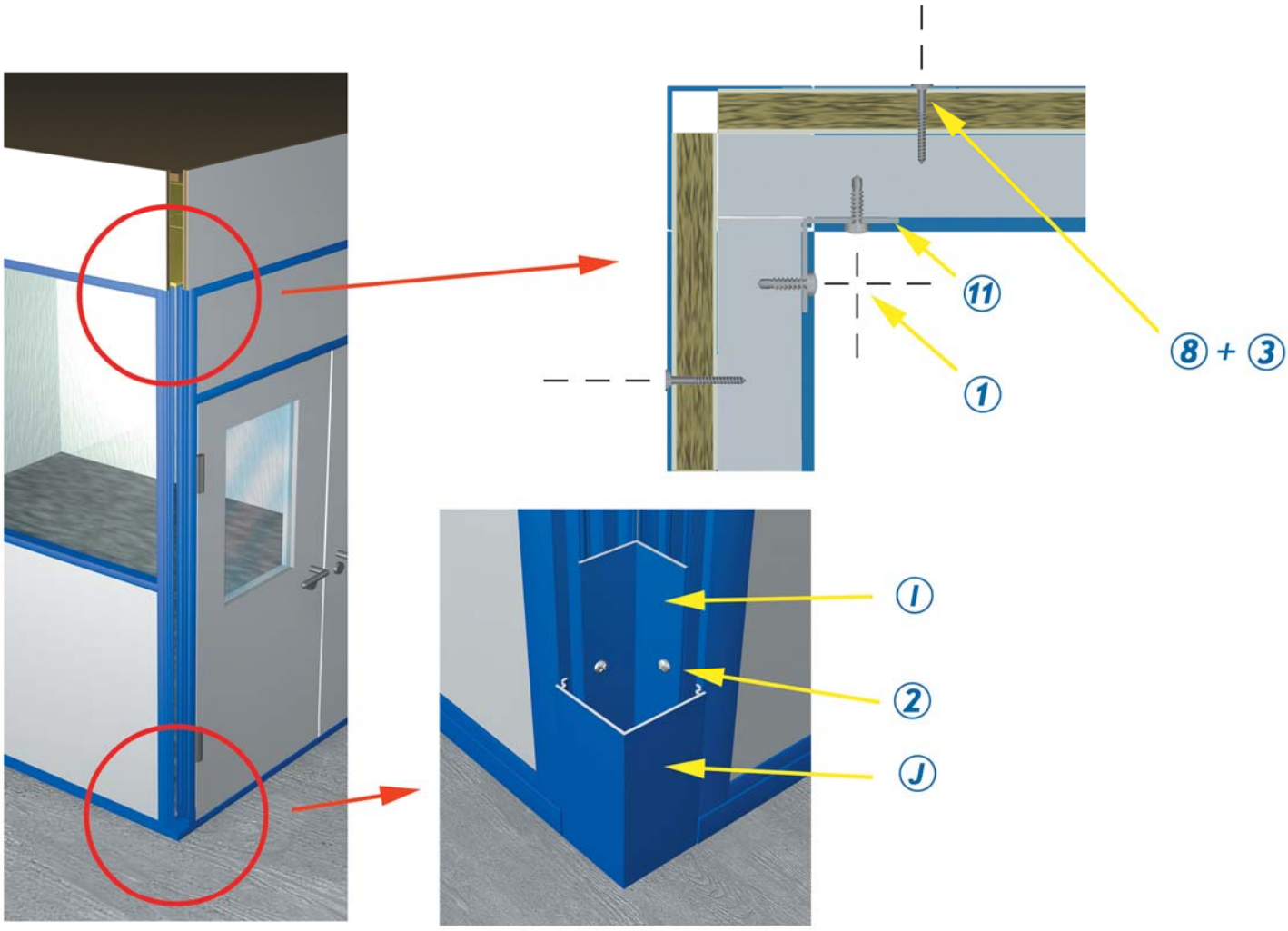
11
8 + 3
1
I
2
J

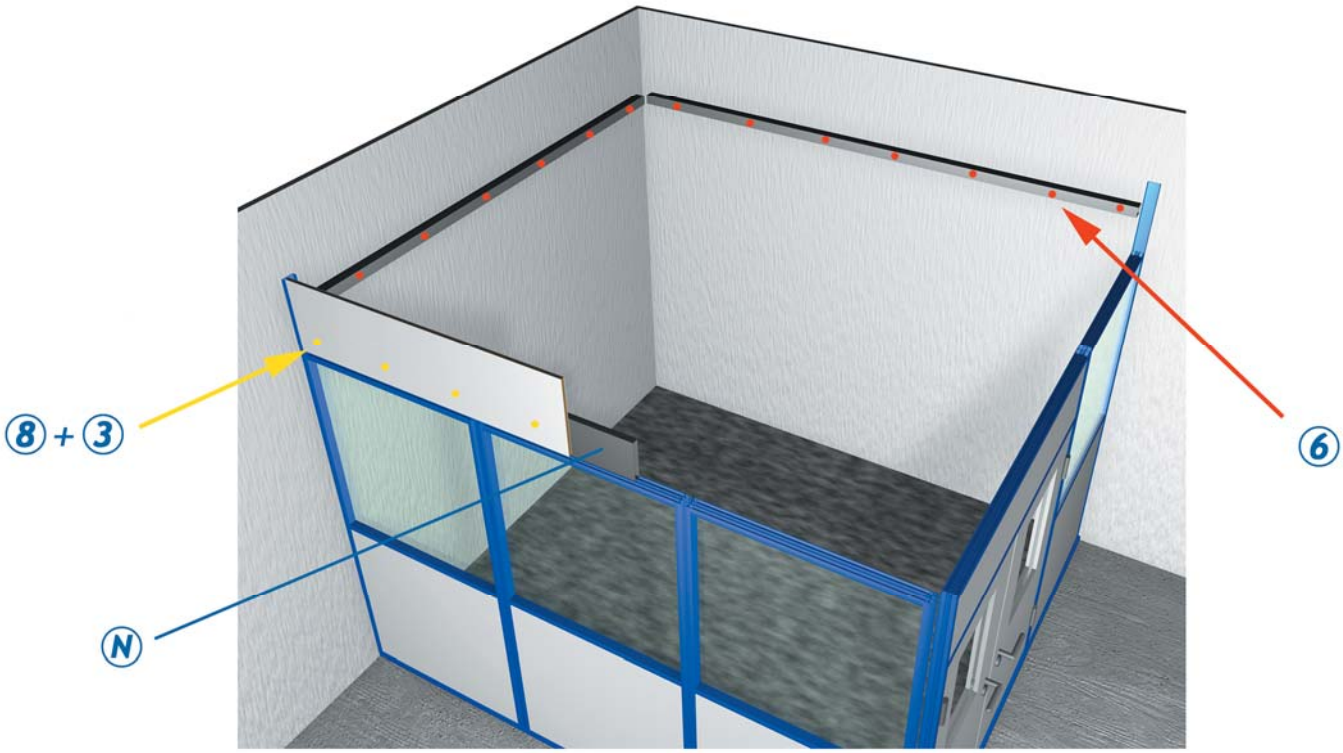
8 + 3
6
N

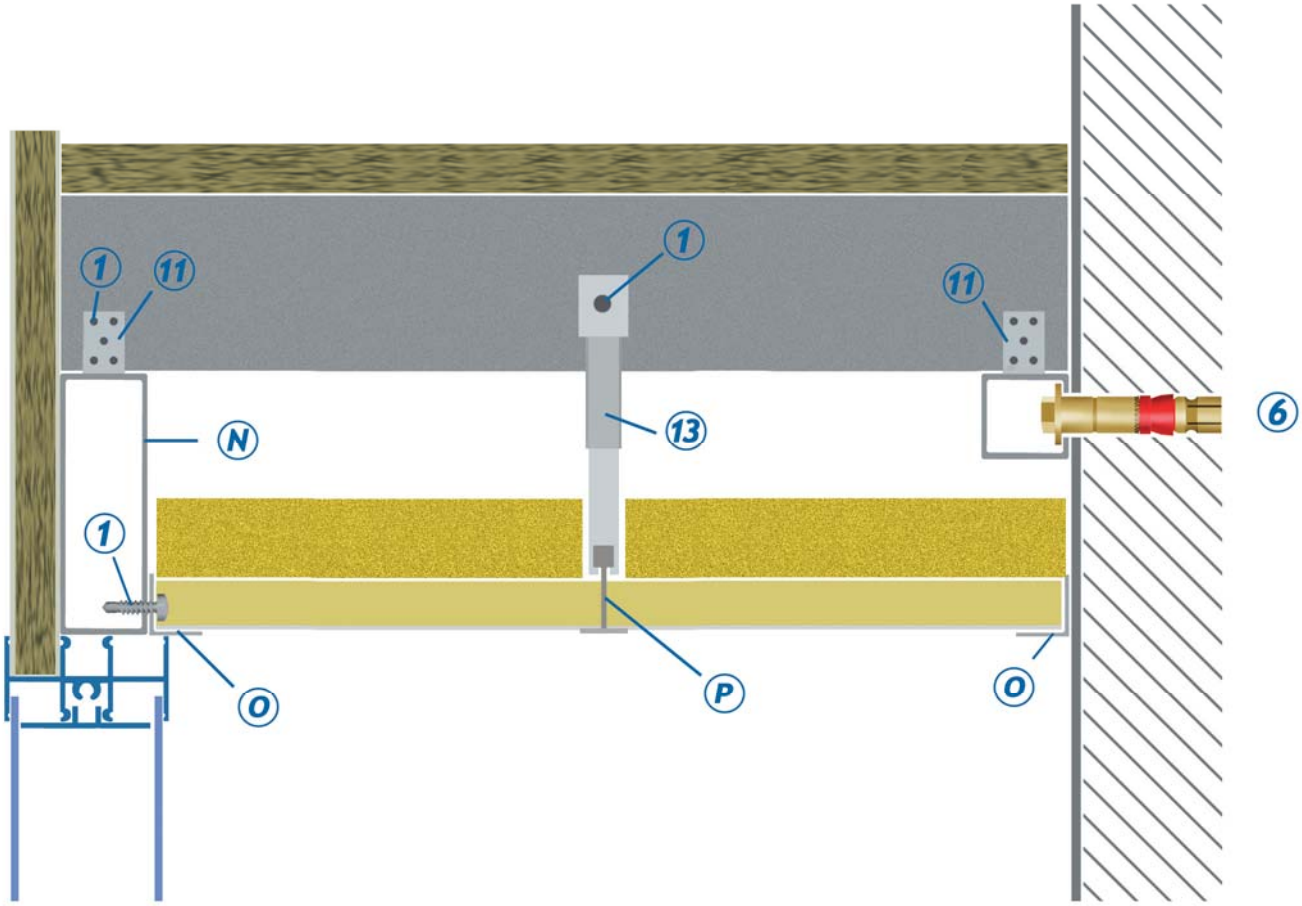
1
11
1
11
N
13
6
1
O
P
O

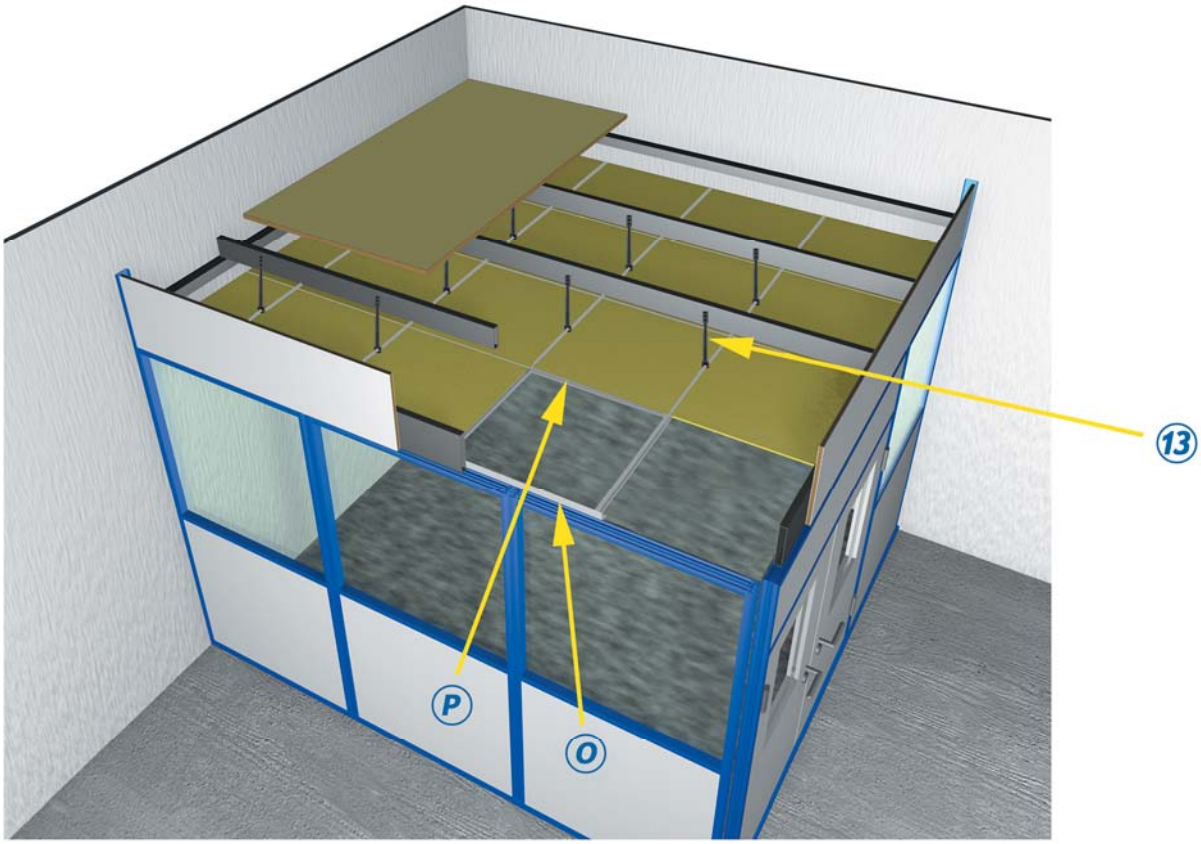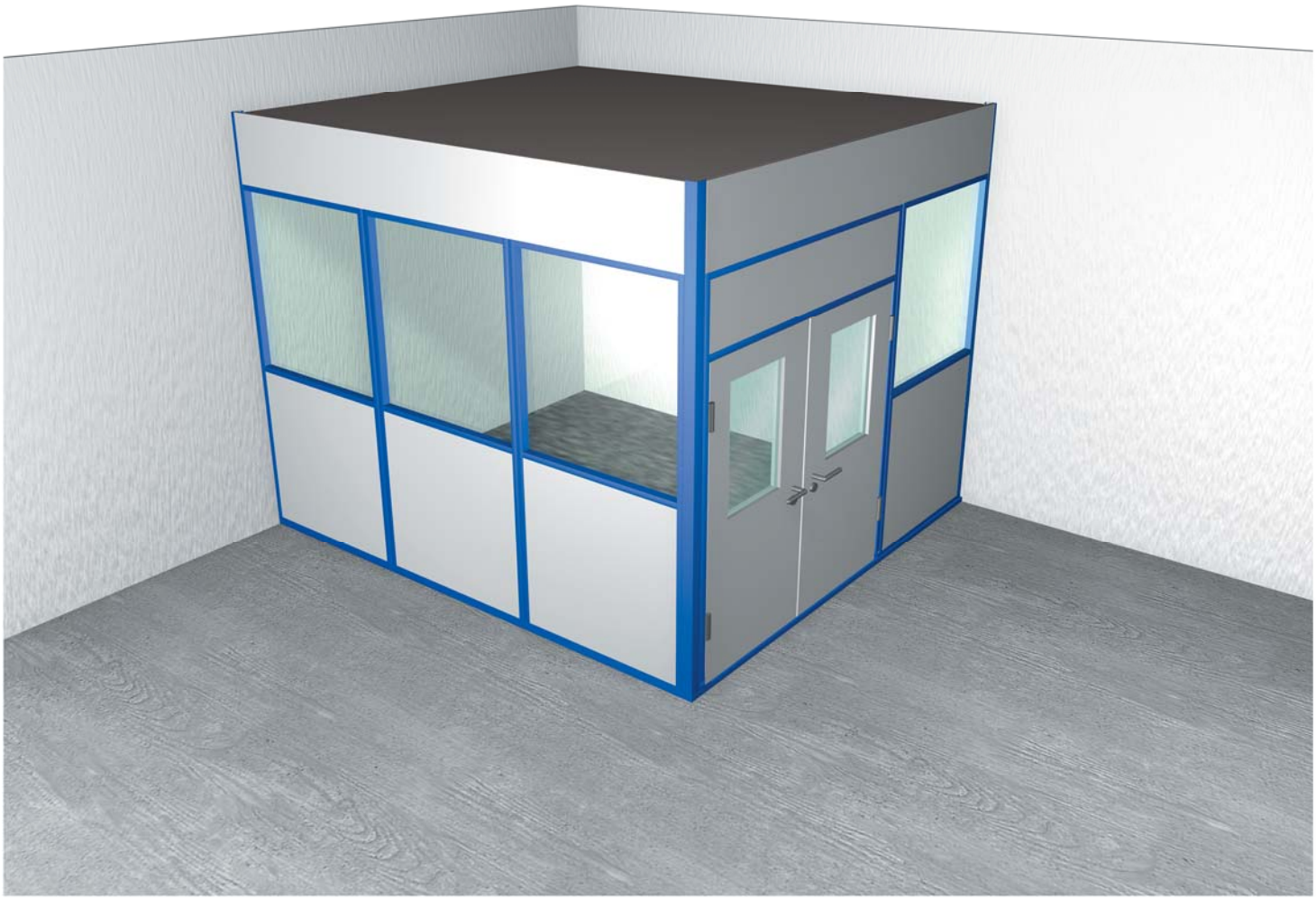
13
P
O