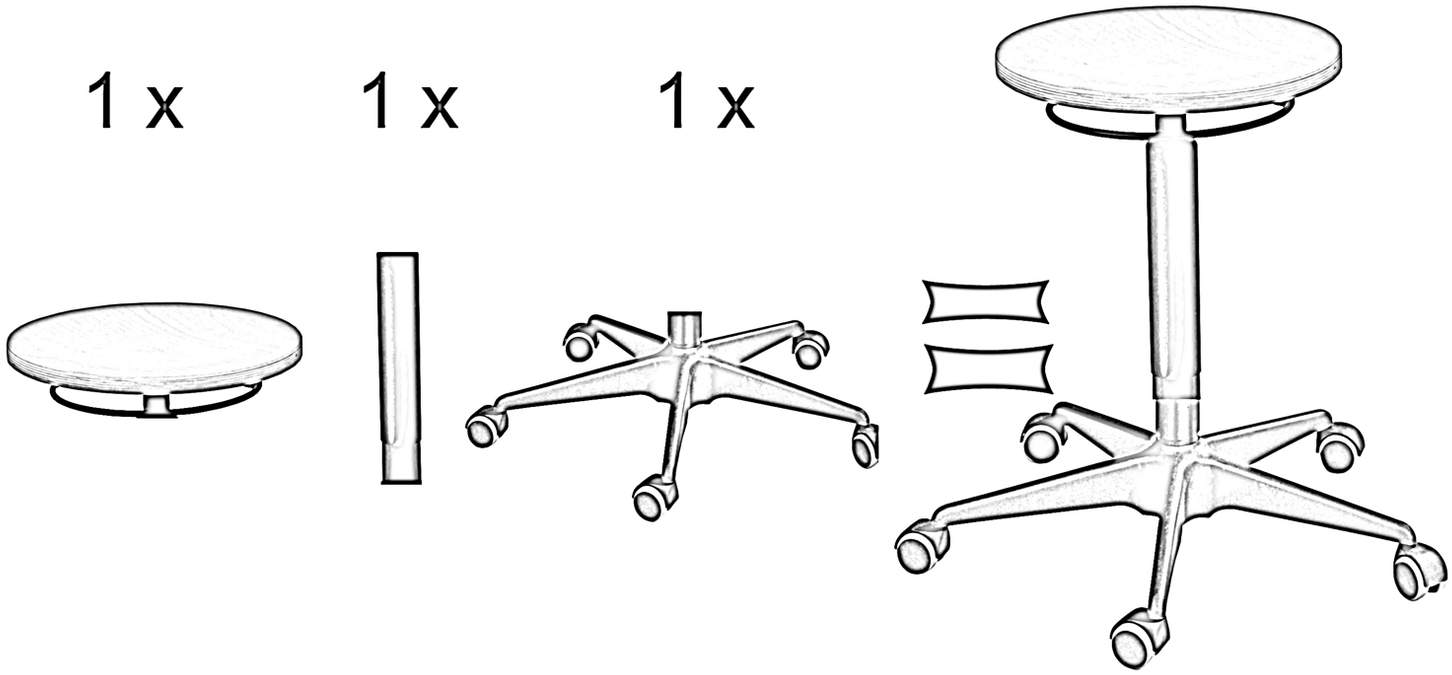
1 x
1 x
1 x

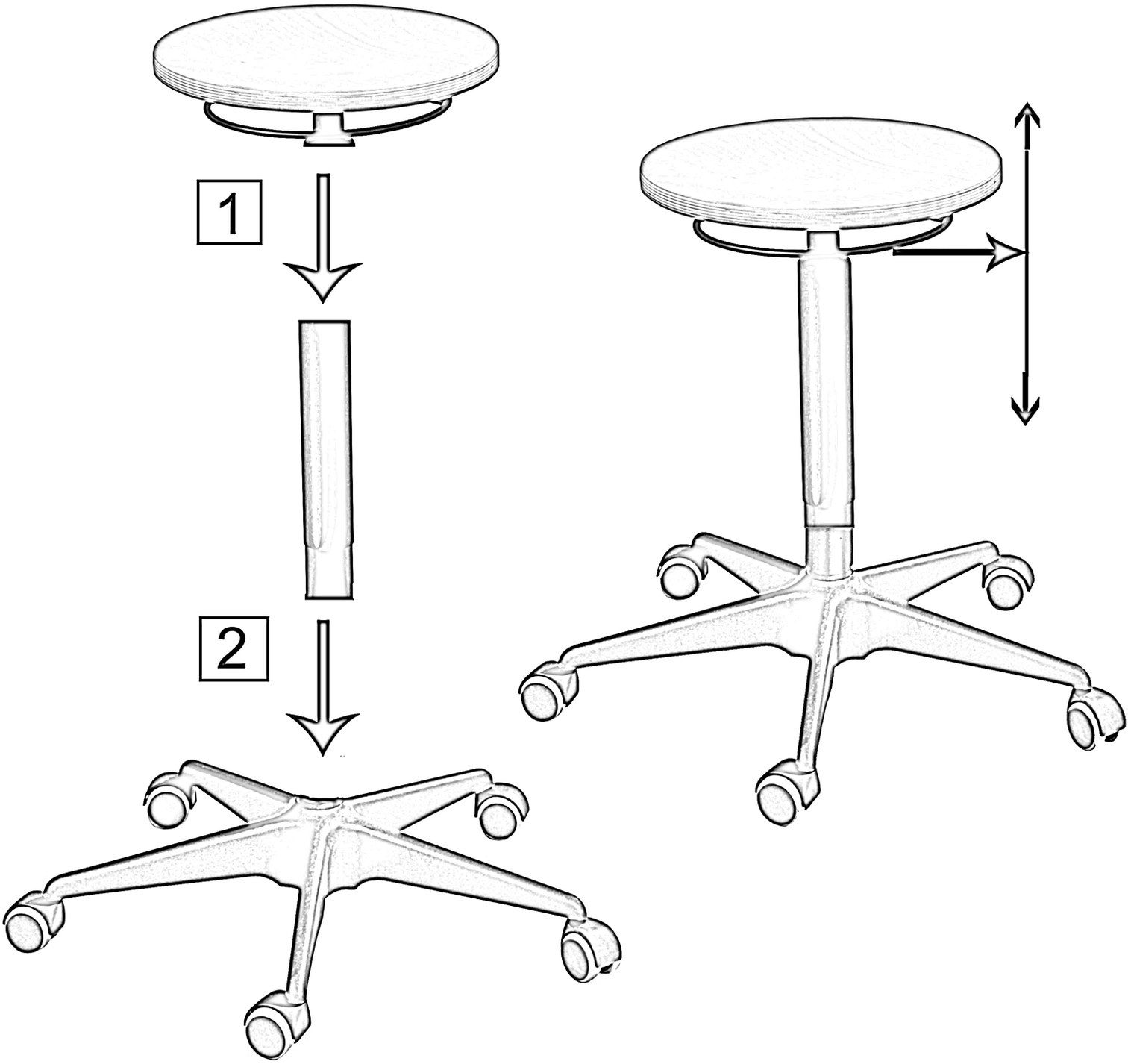
1
2