MONTAGEANLEITUNG
INSTRUCTIONS FOR OPERATING
INSTRUCTIONS DE MONTAGE
MONTAGEHANDLEIDING

①

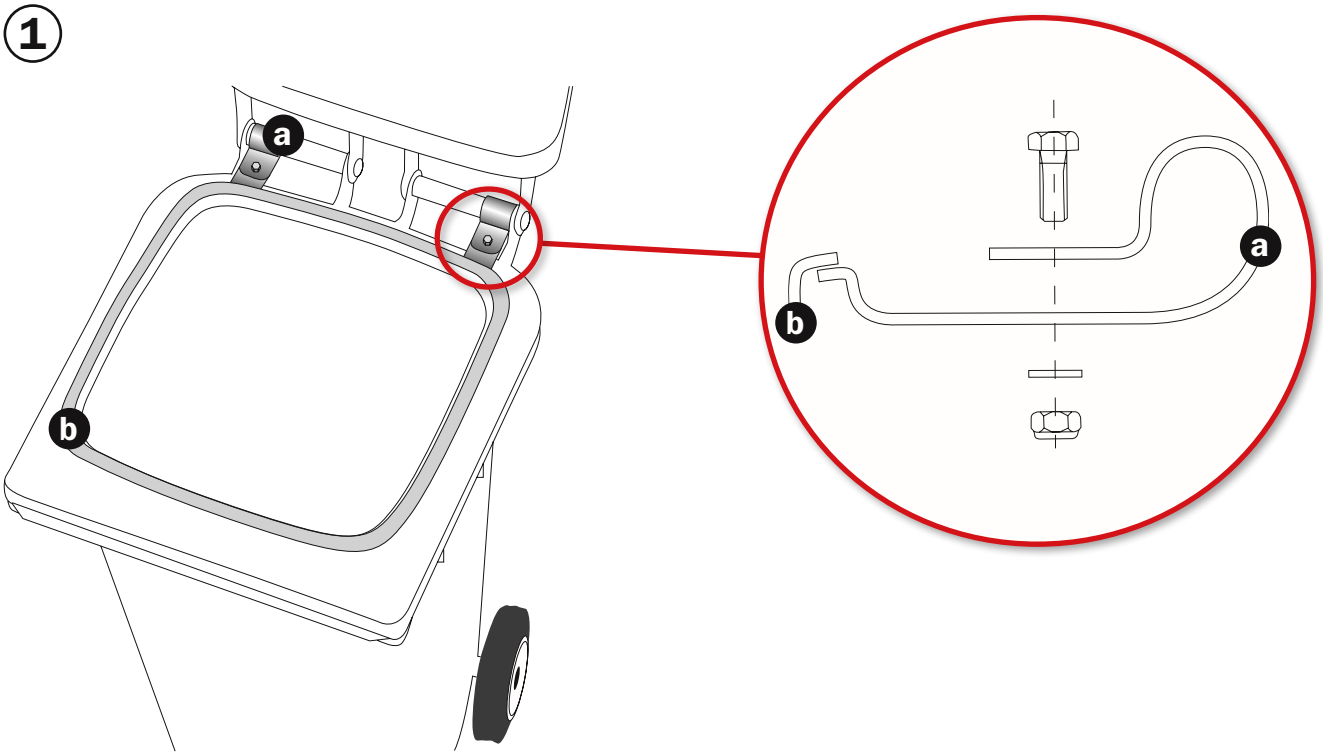
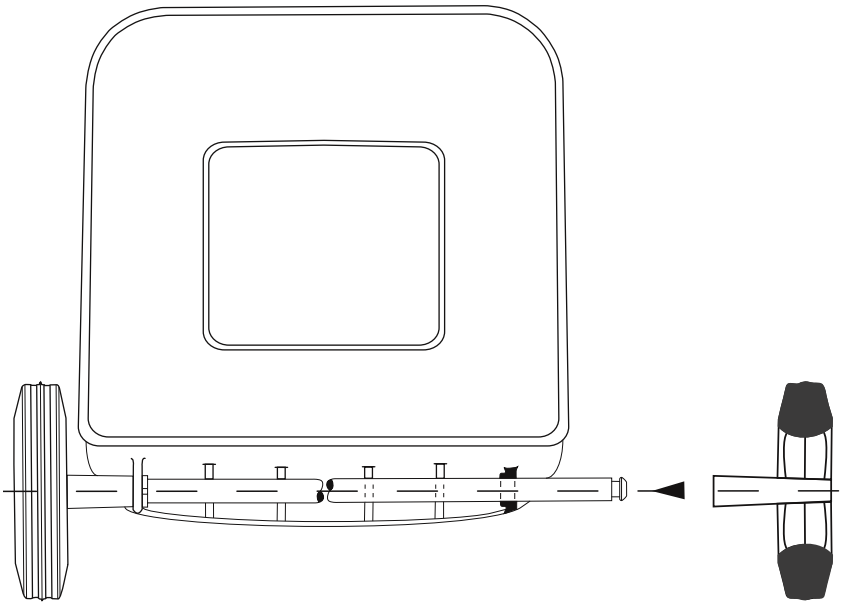
②