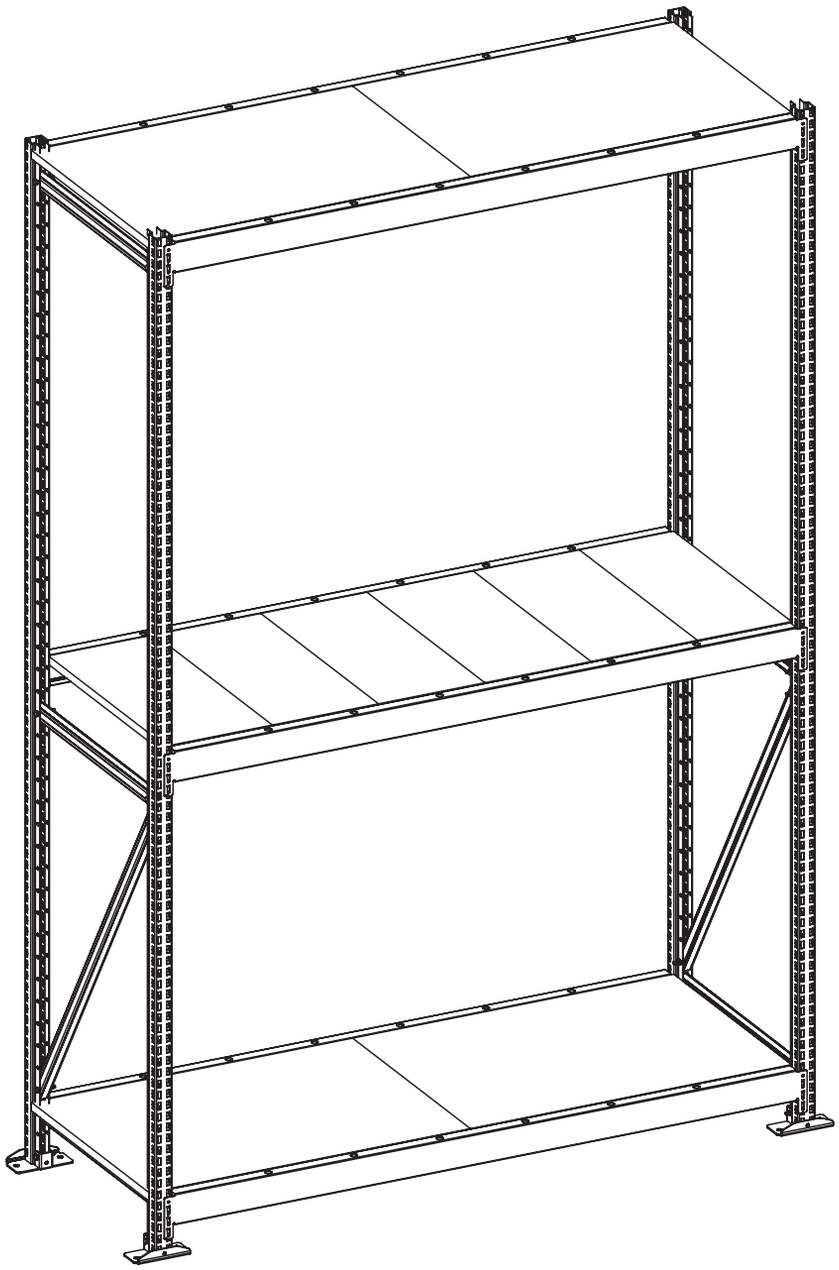

WS 2000 I WS 3000 I Z 1 I W 100 **Art.-Nr. 13033-KK**

GB Wide span racks - **Assembly and operating instructions**
FR Rayonnages grande portée - **Instructions de montage et de service**
NL Grootvakstellingen - **Opbouw- en Bedieningshandleiding**
ES Estanterías amplias - **Instrucciones de montaje y uso**
IT Scaffali a ripiani lunghi - **Istruzioni per il montaggio e l'uso**
PT Estantes largas - **Manual de montagem e instruções**
PL Regały o dużej rozpiętości - **Instrukcja montazu i eksploatacji**
CZ Regály s velkým rozpětím - **Navod k montazi a obsluze**
HU Nagy fesztávú polcrendszer - **Felepitesi es hsaznalatiutasitas**
RO Rafturi cu deschiderea larga - **Instructiuni de asamblare si utilizare**
DK Bred span reoler - **Opbygnings- og Betjeningsmanuel**
NO Stort spenn hyller - **Montasje- og Betjeningsveileding**
SE Extra breda hyllställ - **Monterings- och Bruksanvisning**
RU Длинные стеллажи - **Монтаж и Инструкция по эксплуатации**
TR Geniş aralıklı raflar - **Montaj ya kullanma kılavuzu**
SI Široki regali - **Namestitev in Operating Manual**
HR Široki regali - **Instalacija i Operativni Priručnik**
SK Regály s veľkým rozpätím - **Návod na inštaláciu a obsluhu**
JP ワイドスパン棚 - 設置·操作マニュアル
CN 大跨度貨架 - 安裝和操作手冊

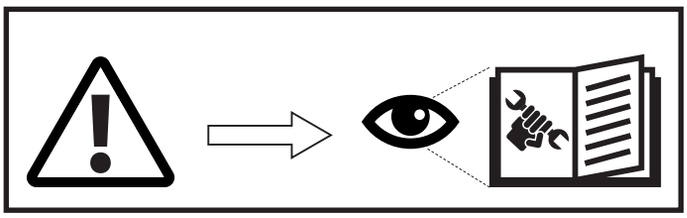

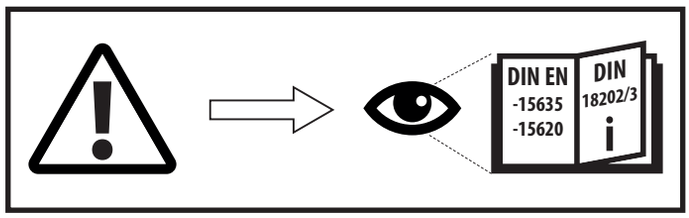
DIN EN
-15635
-15620
DIN
18202/3

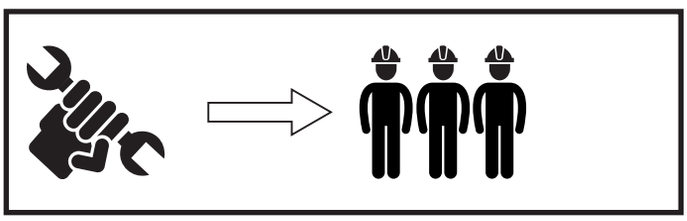

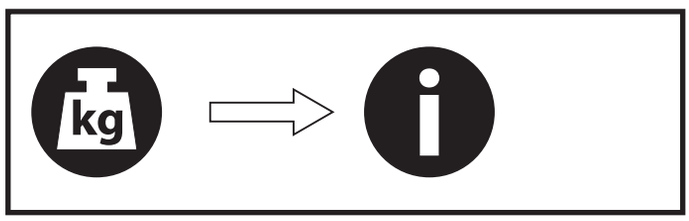
kg

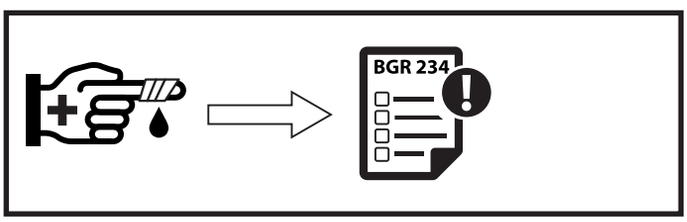
BGR 234

WS 2000

5 - 7

kg 6

WS 3000

8 - 11

kg

Z 1

12 - 14

kg 14

Z 1 - A

15 - 16

kg 15

Z 1 - B

17 - 18

kg 17

W 100

19 - 23

kg 20 - 21

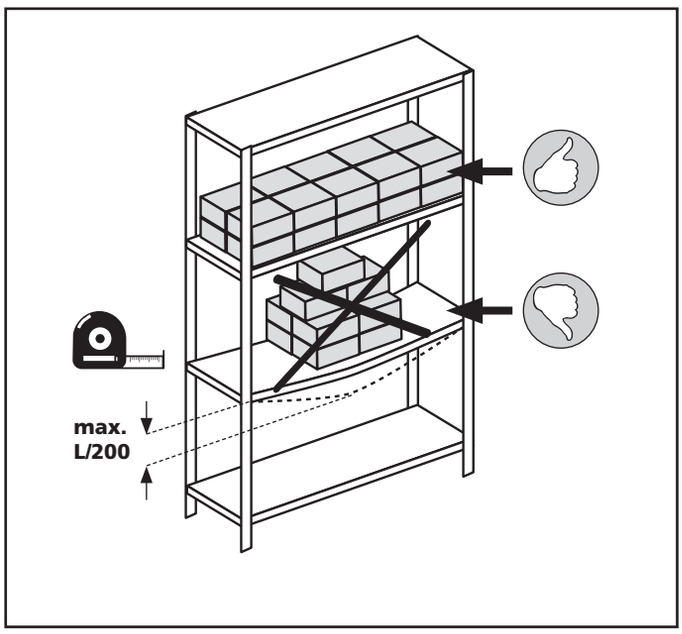

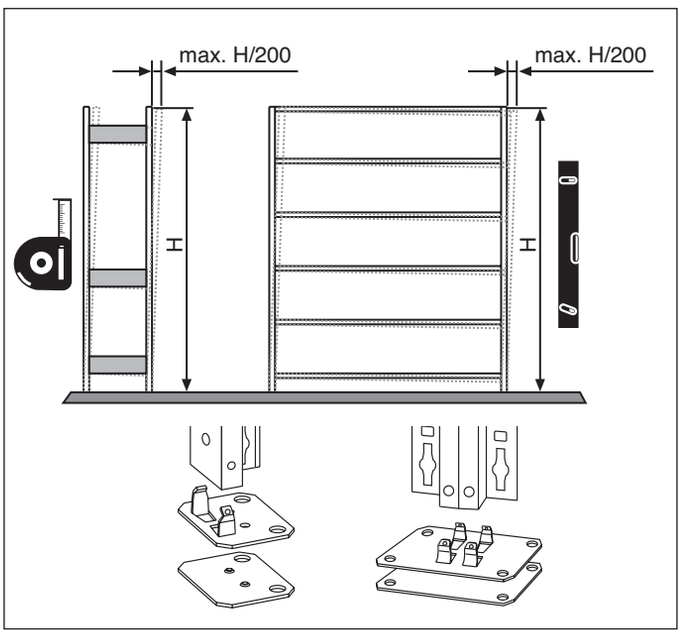

WS2000

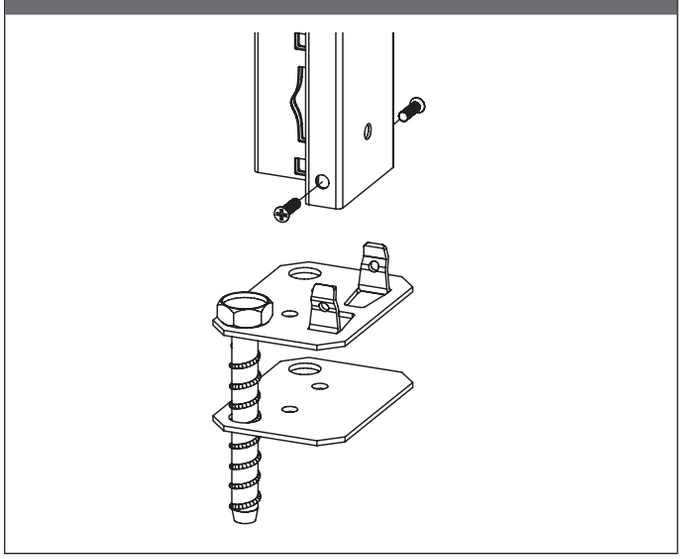

WS2000

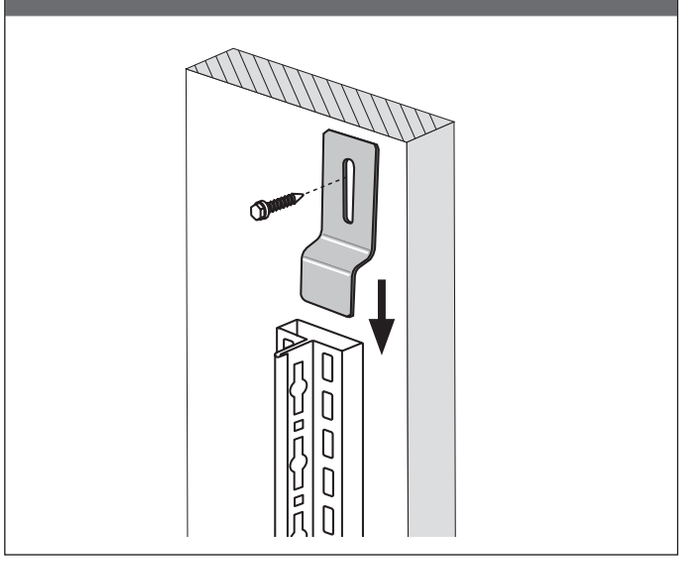

WS3000 / W100

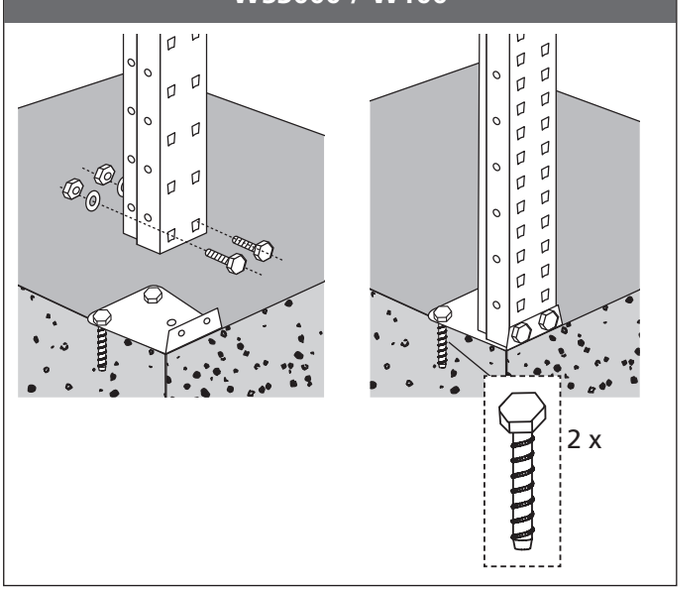

W100 / Z1

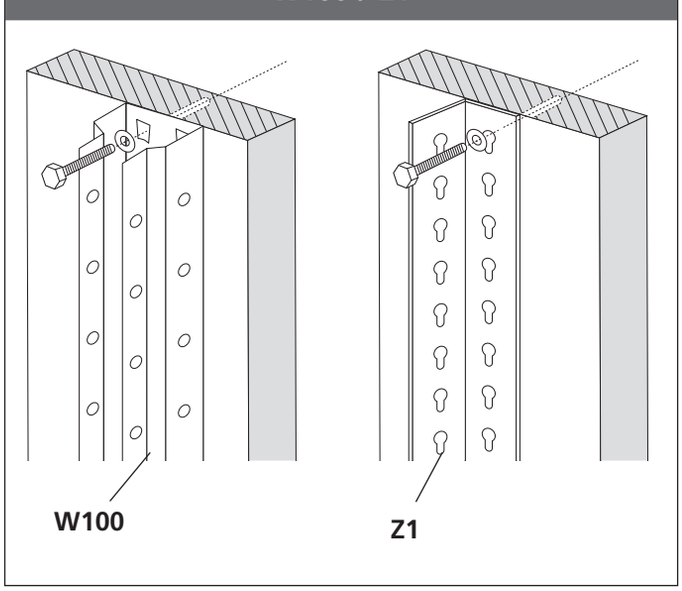

WS 2000

T 1 / T 2

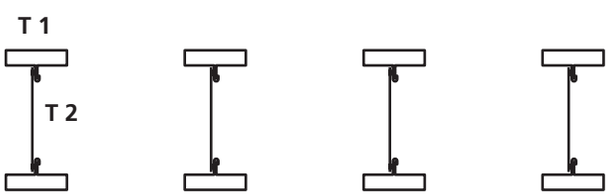

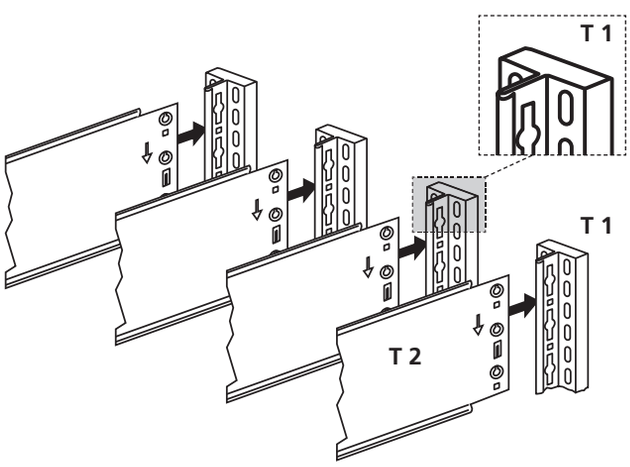

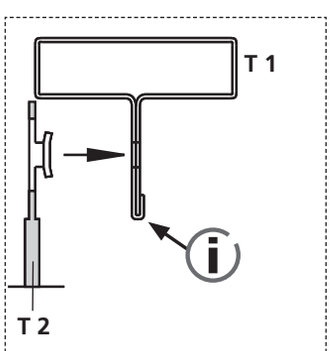

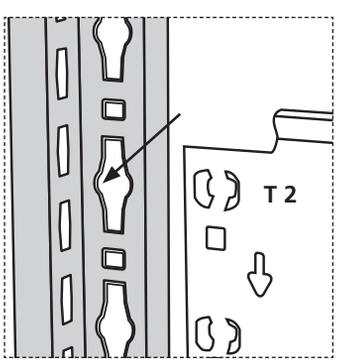

T 2

1.

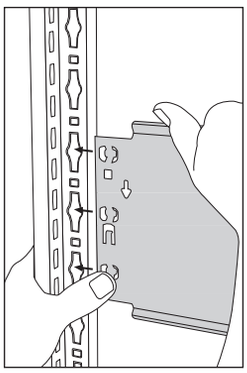

2.

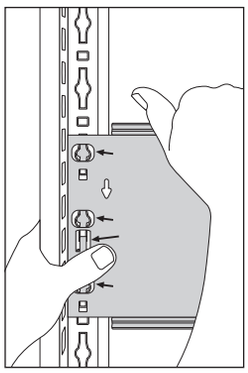

3.

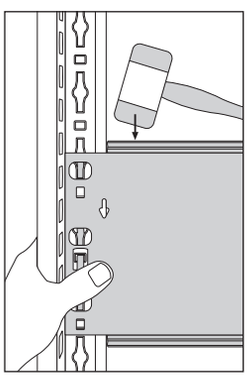

4.

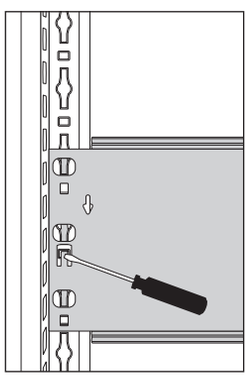

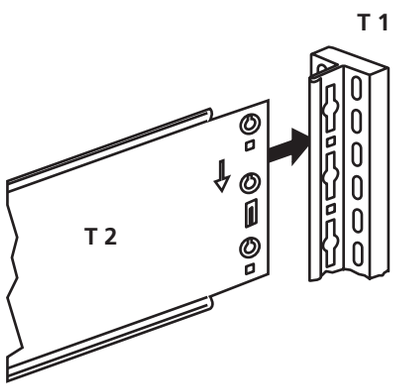

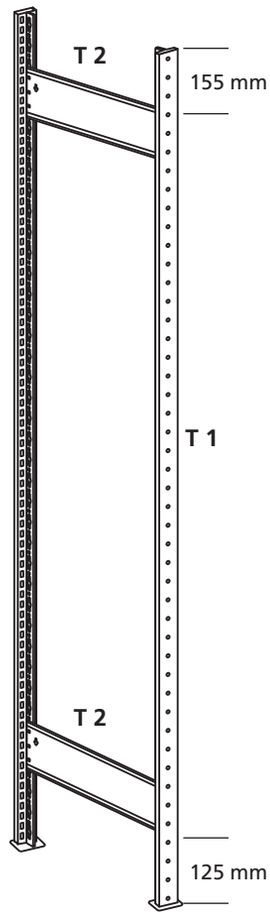

H & n = Q max. KG

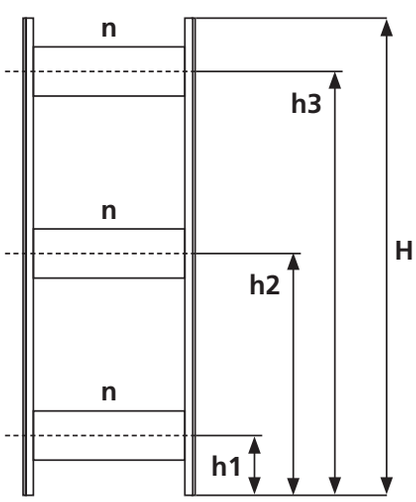

H & n

H mm	n =	mm		
		h1	h2	h3
2.000 - 2.299	2	206	1.756	---
2.300 - 2.499	2	206	2.056	---
2.500 - 3.000	3	206	1.006	2.256

Q max. kg

H =	2.000 mm / n =	2.500 mm / n =	3.000 mm / n =
Q max.	**n = 3: 1.250 kg**	**n = 4: 1.800 kg**	**n = 5: 2.100 kg**
Q max.	**n = 2: 800 kg**		

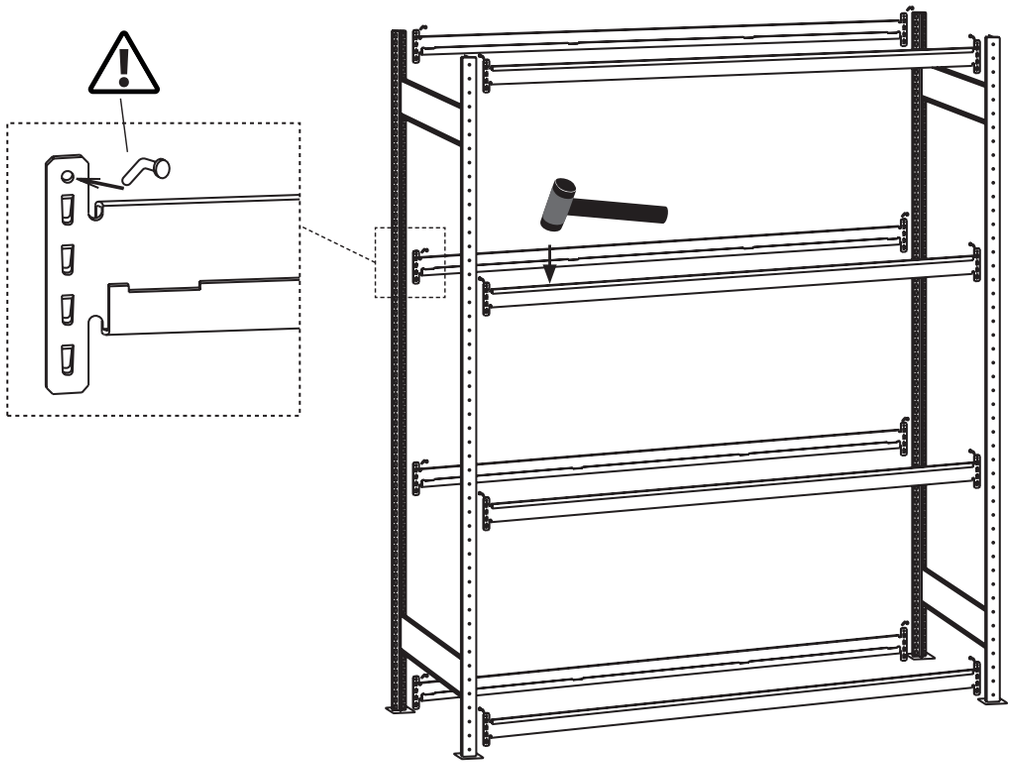

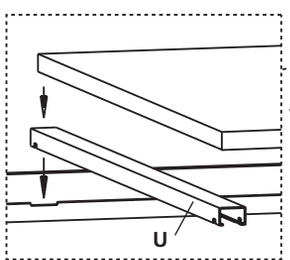
U

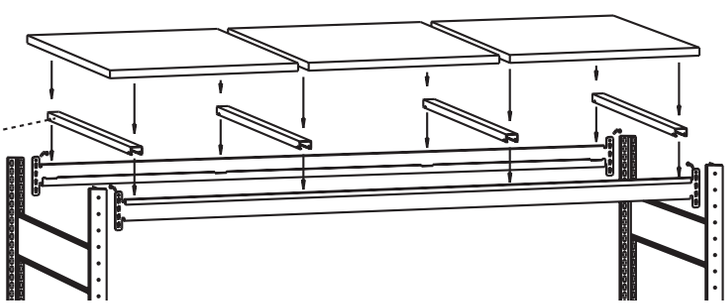

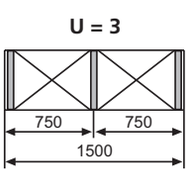
U = 3
750
750
1500

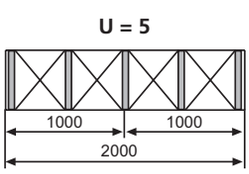
U = 5
1000
1000
2000

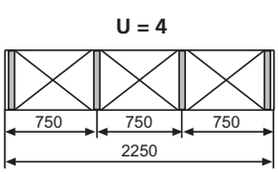
U = 4
750
750
750
2250

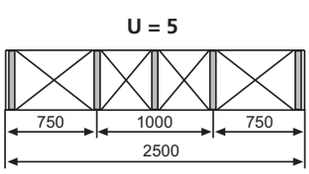
U = 5
750
1000
750
2500

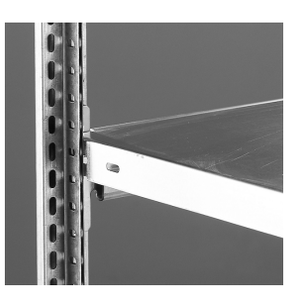

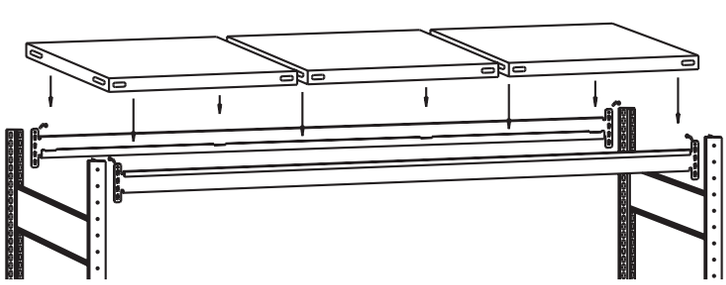

WS 3000

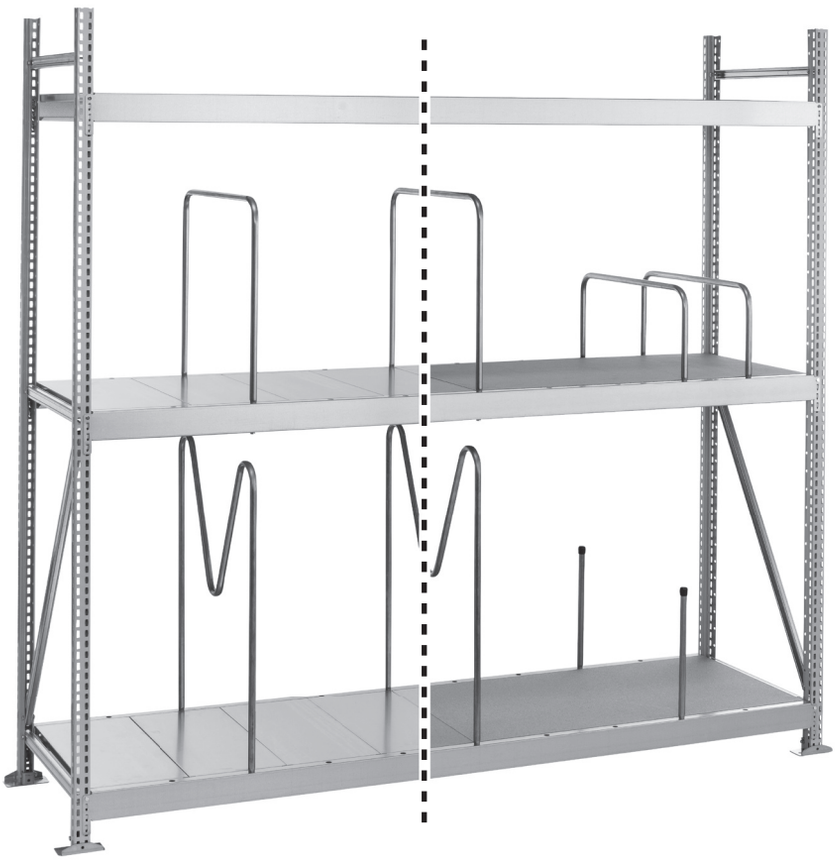

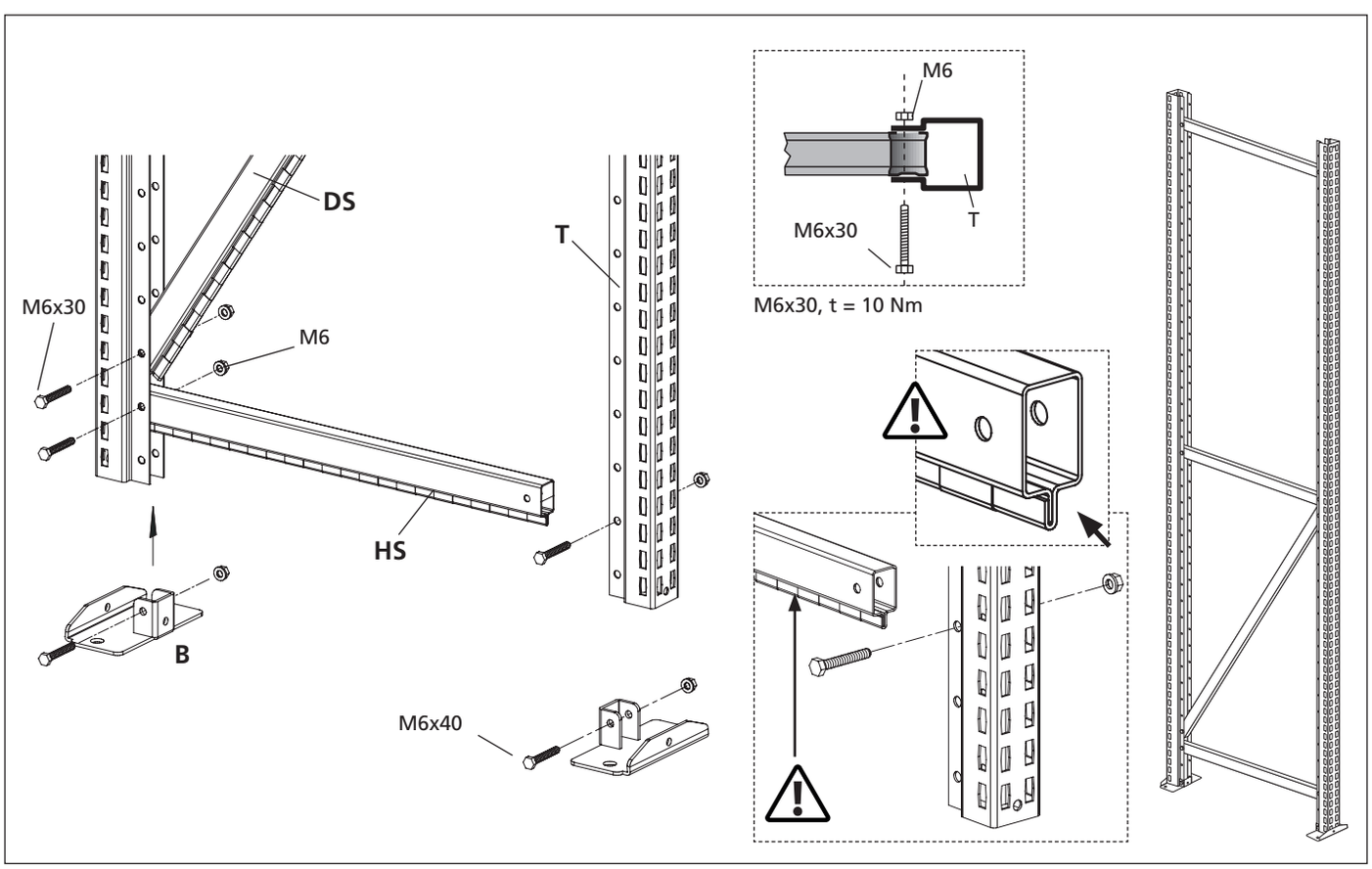

HS & DS

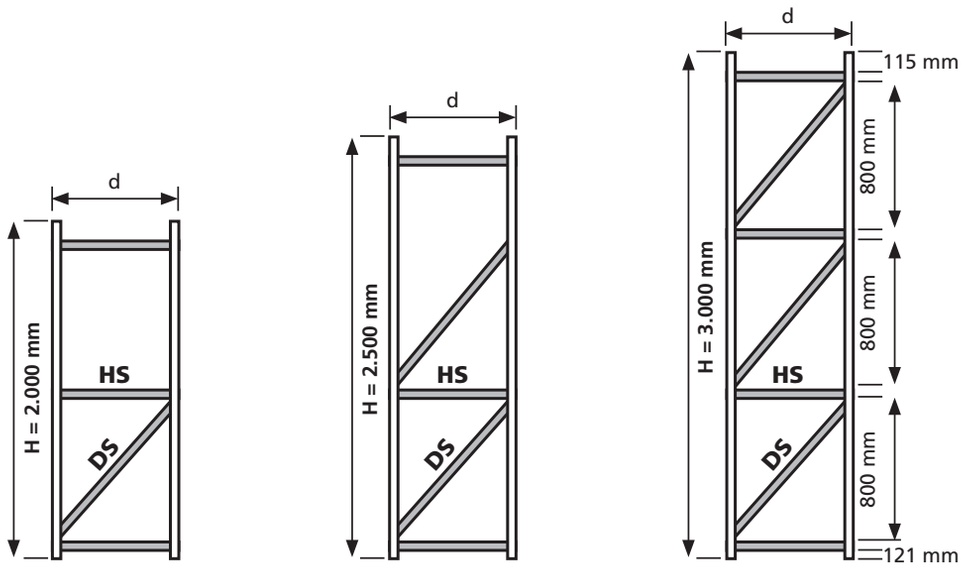

HS & DS

H =	2.000 mm	2.500 mm	3.000 mm
HS:	3 x	3 x	4 x
DS:	1 x	2 x	3 x

HS & DS (mm)

d =	500 mm	600 mm	800 mm	1.000 mm
HS (mm)	453 mm	553 mm	753 mm	953 mm
DS (mm)	940 mm	990 mm	1.112 mm	1.254 mm

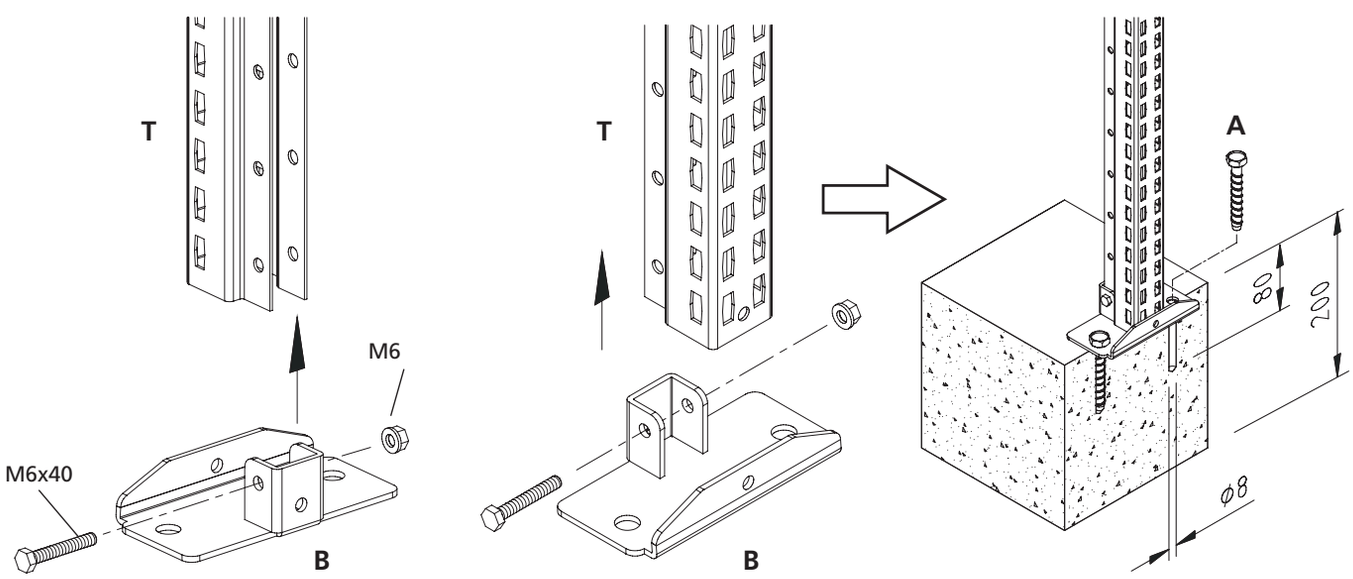

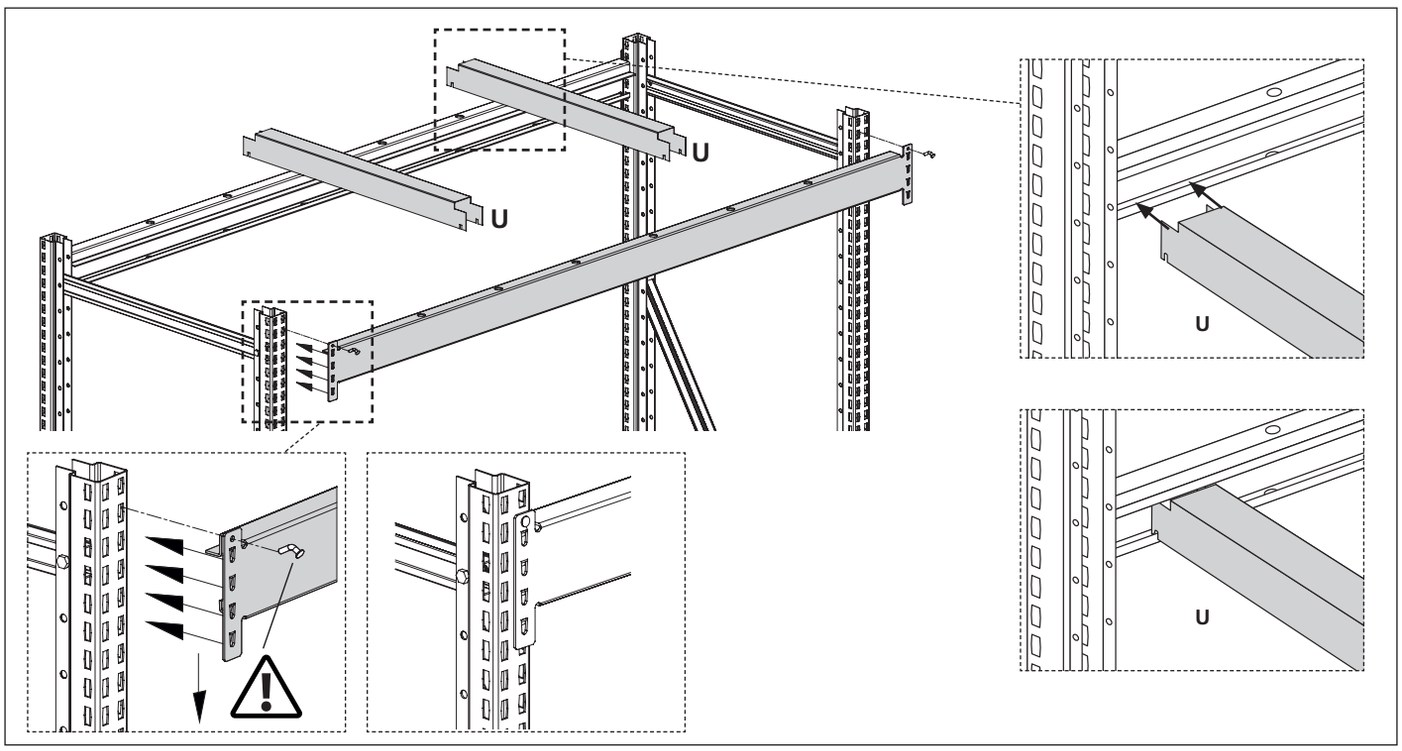
U
U
U
U

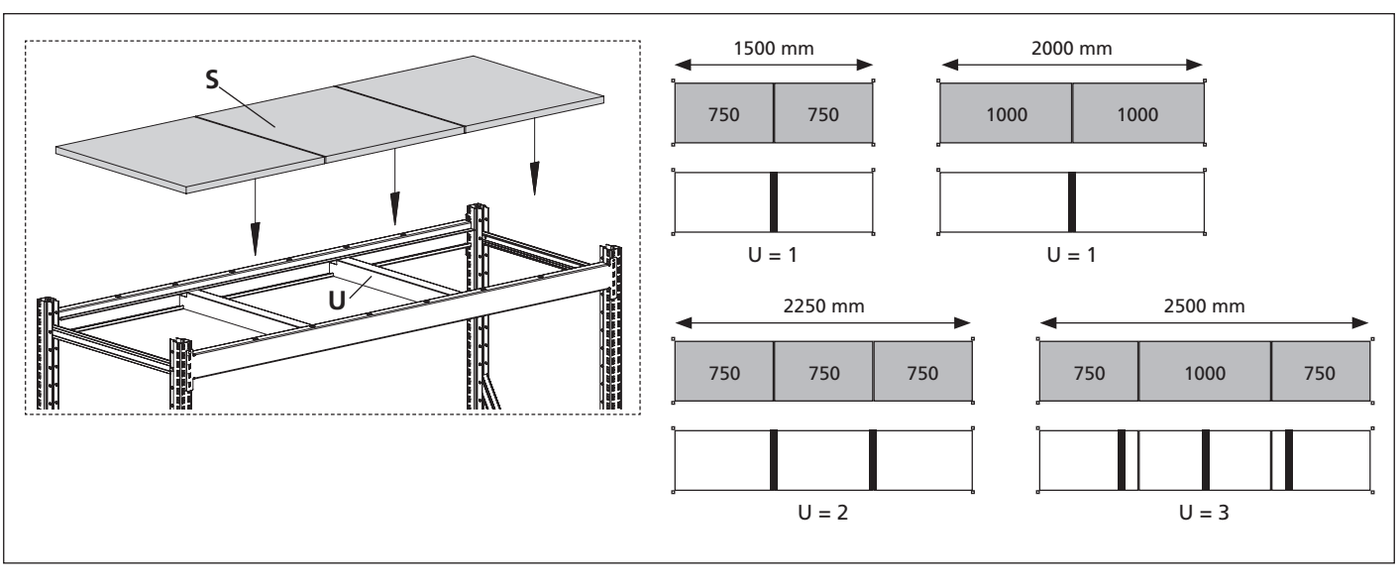
S
U
1500 mm
750
750
U = 1
2000 mm
1000
1000
U = 1
2250 mm
750
750
750
U = 2
2500 mm
750
1000
750
U = 3

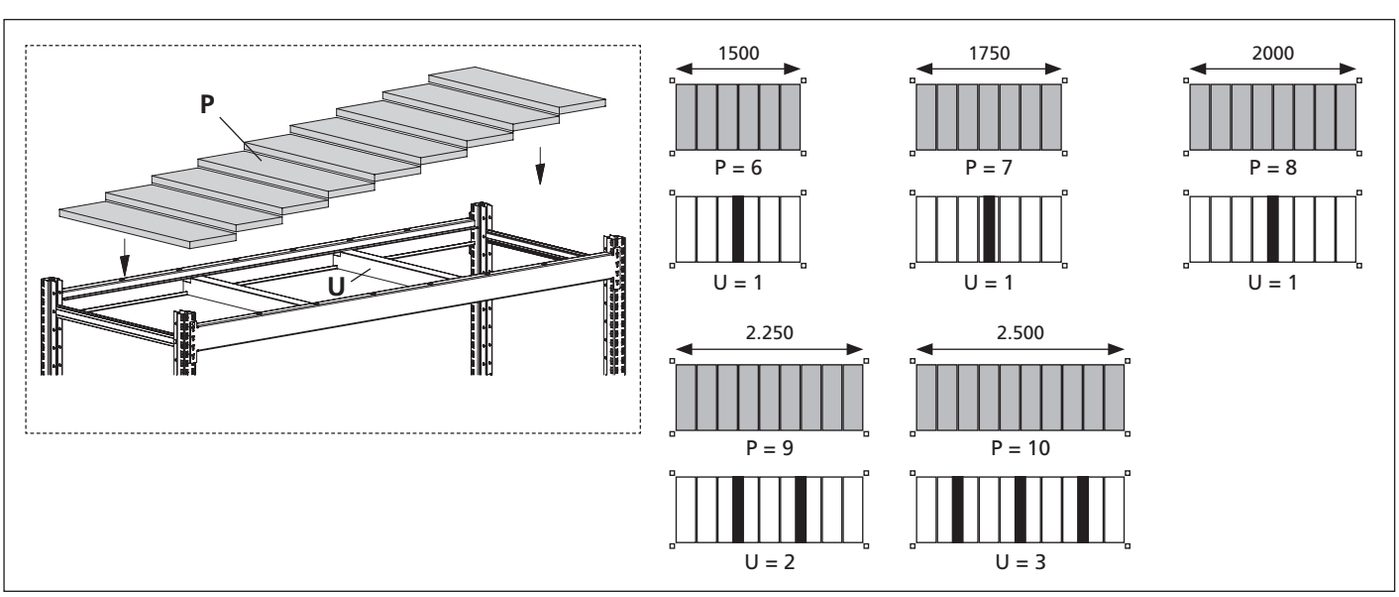
P
U
1500
P = 6
U = 1
1750
P = 7
U = 1
2000
P = 8
U = 1
2.250
P = 9
U = 2
2.500
P = 10
U = 3

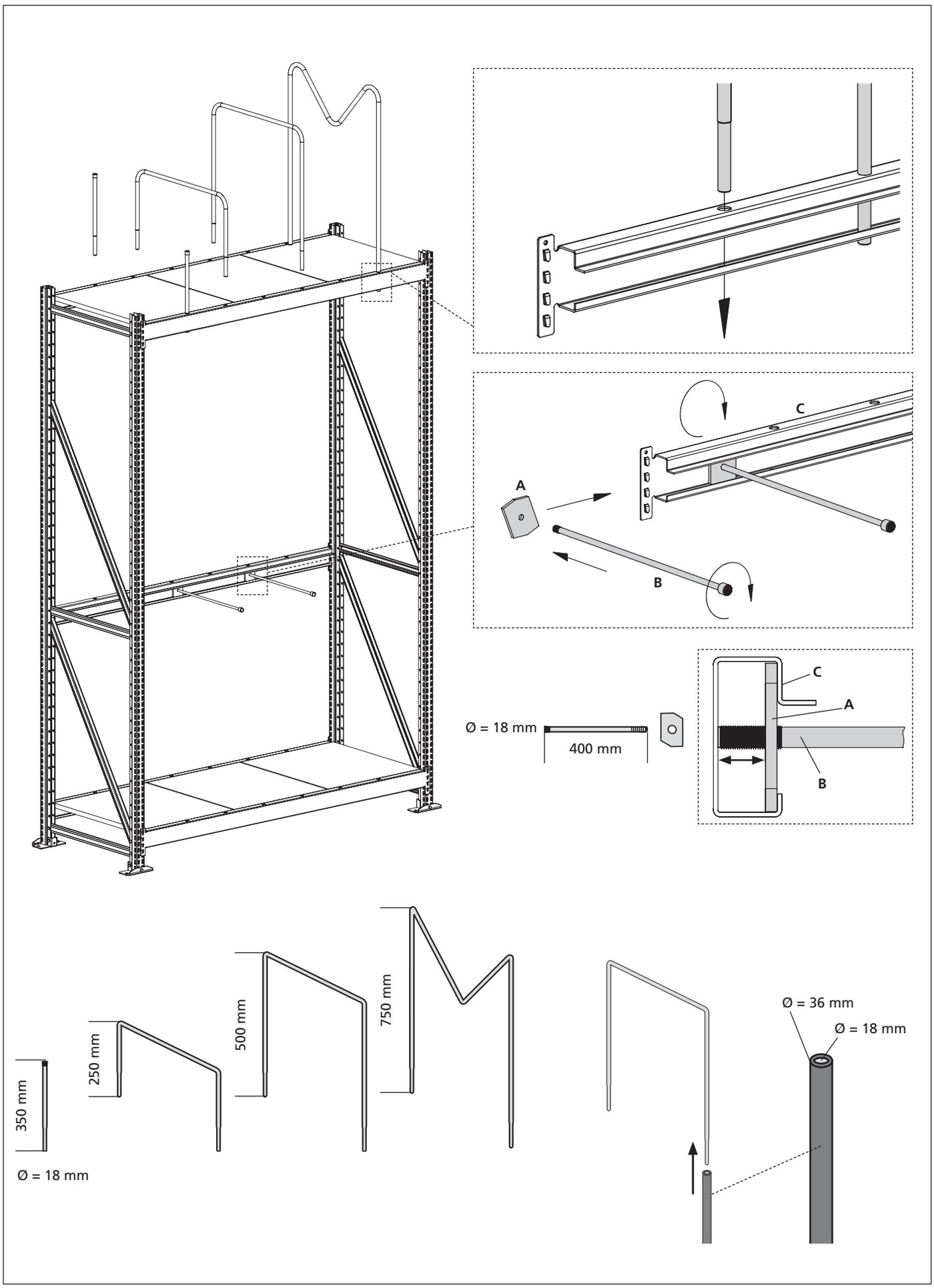
C
A
B
Ø = 18 mm
400 mm
C
A
B
350 mm
250 mm
500 mm
750 mm
Ø = 18 mm
Ø = 36 mm
Ø = 18 mm

Z 1

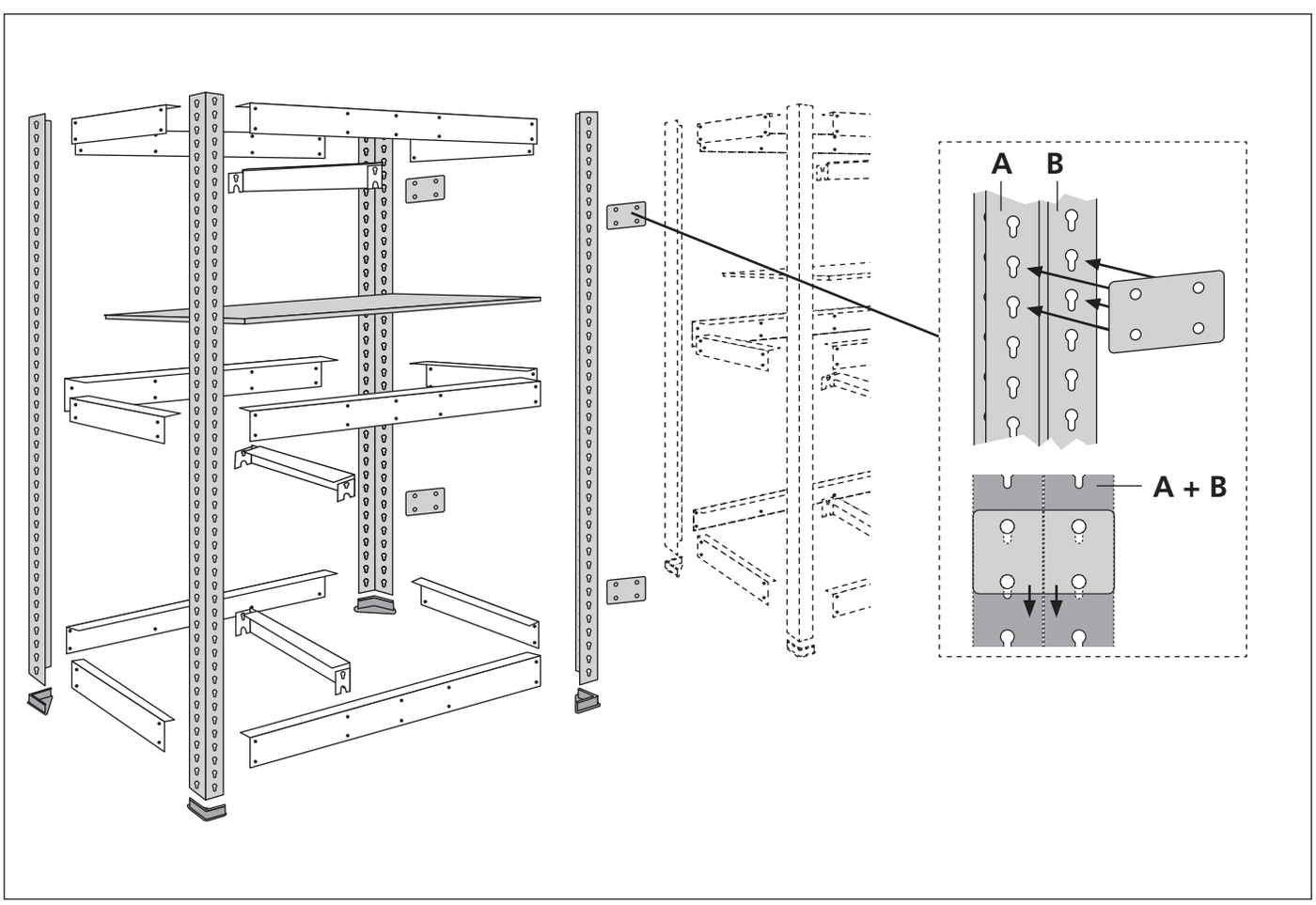

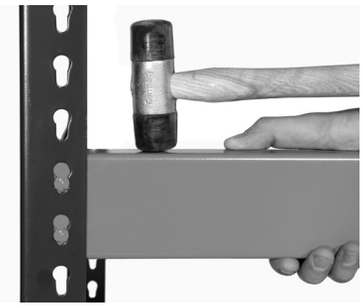

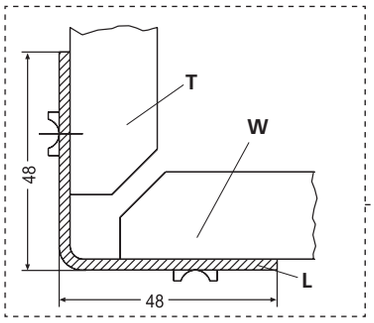
T
W
48
L
48

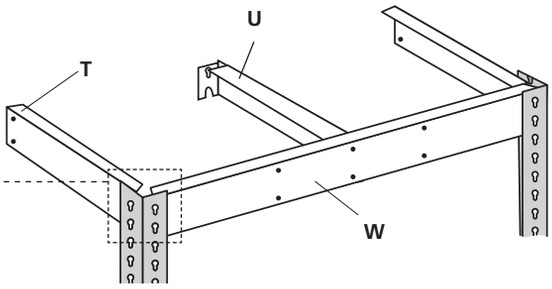
U
T
W

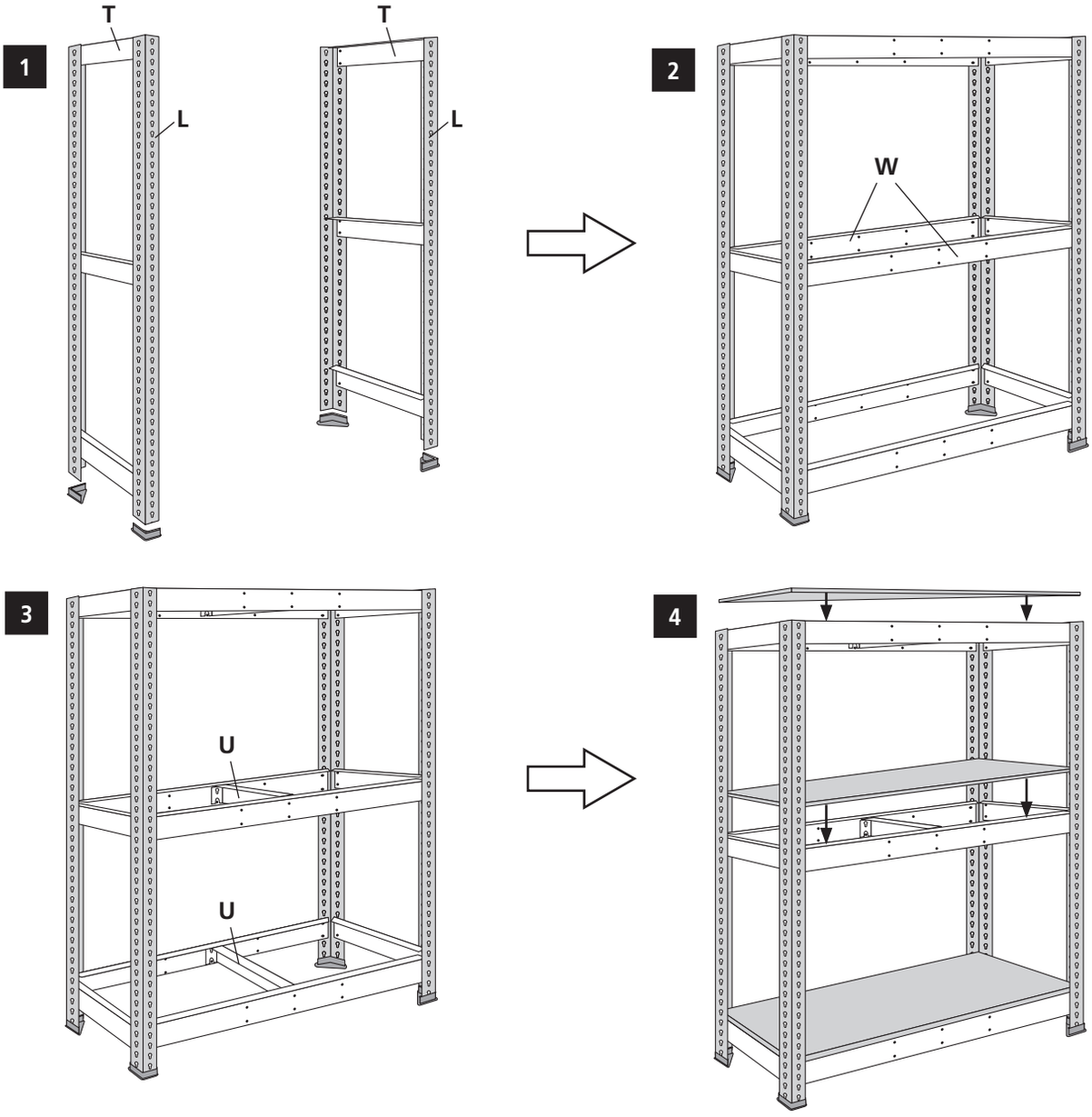
1
T
L
T
L
2
W
3
U
U
4

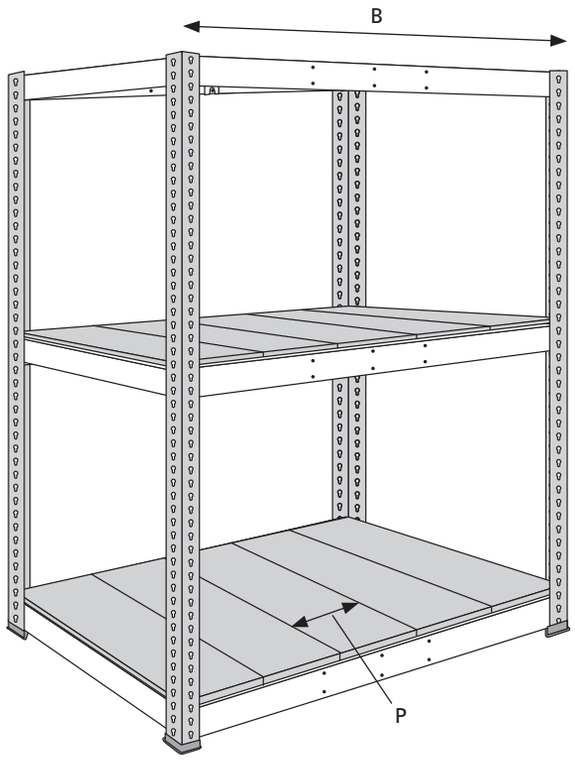

B	P = 305 mm	P = 260 mm	P = 24 mm
1.536 mm	4	1	2
1.841 mm	5	1	2
2.146 mm	6	1	2
2.450 mm	7	1	2

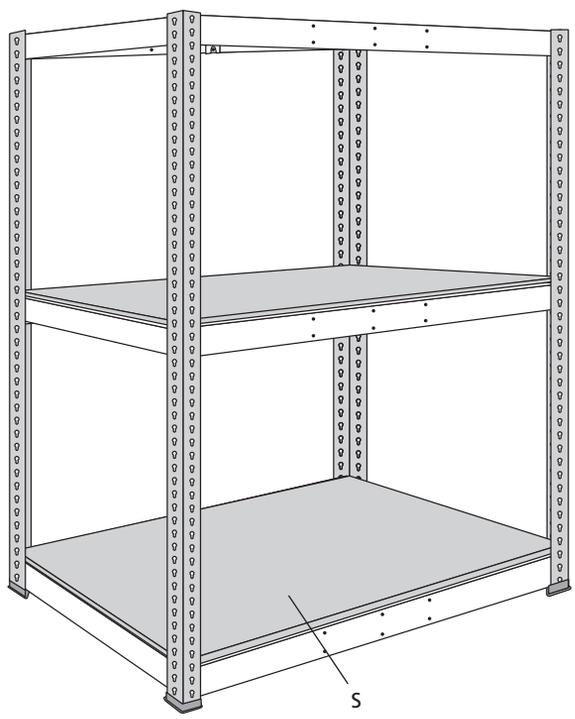

Q1 & Q max. (kg)

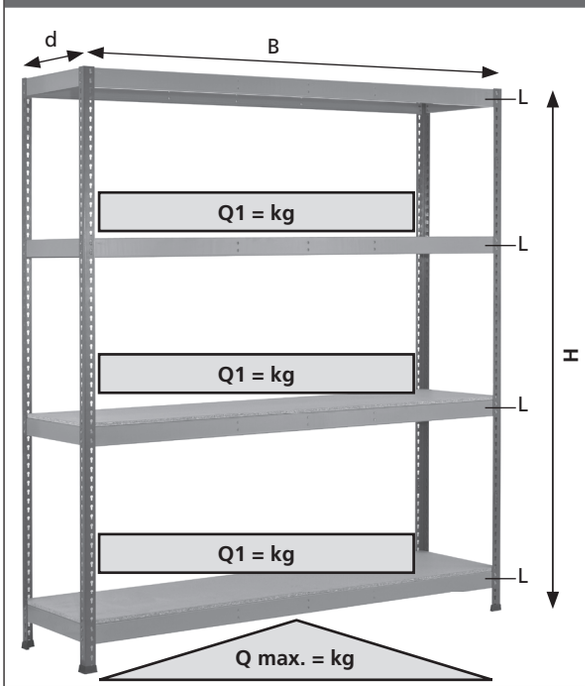

Q1 = kg

B (mm)	1.536 mm	1.841 mm	2.146 mm	2.450 mm
d = 469 / 621 mm	640 kg	610 kg	577 kg	545 kg
d = 773 / 926 / 1.230 mm	640 kg	720 kg	620 kg	500 kg

Q max. = kg

H (mm)	1.981 mm	2.438 mm	3.048 mm
Q max.: 3 x L	2.445 kg	2.175 kg	---
Q max.: 4 x L	3.200 kg	2.800 kg	2.500 kg
Q max.: 5 x L	3.500 kg	3.250 kg	3.000 kg
Q max.: 6 x L	3.900 kg	3.600 kg	3.300 kg
Q max.: 7 x L	---	3.850 kg	3.675 kg

Z 1 - A

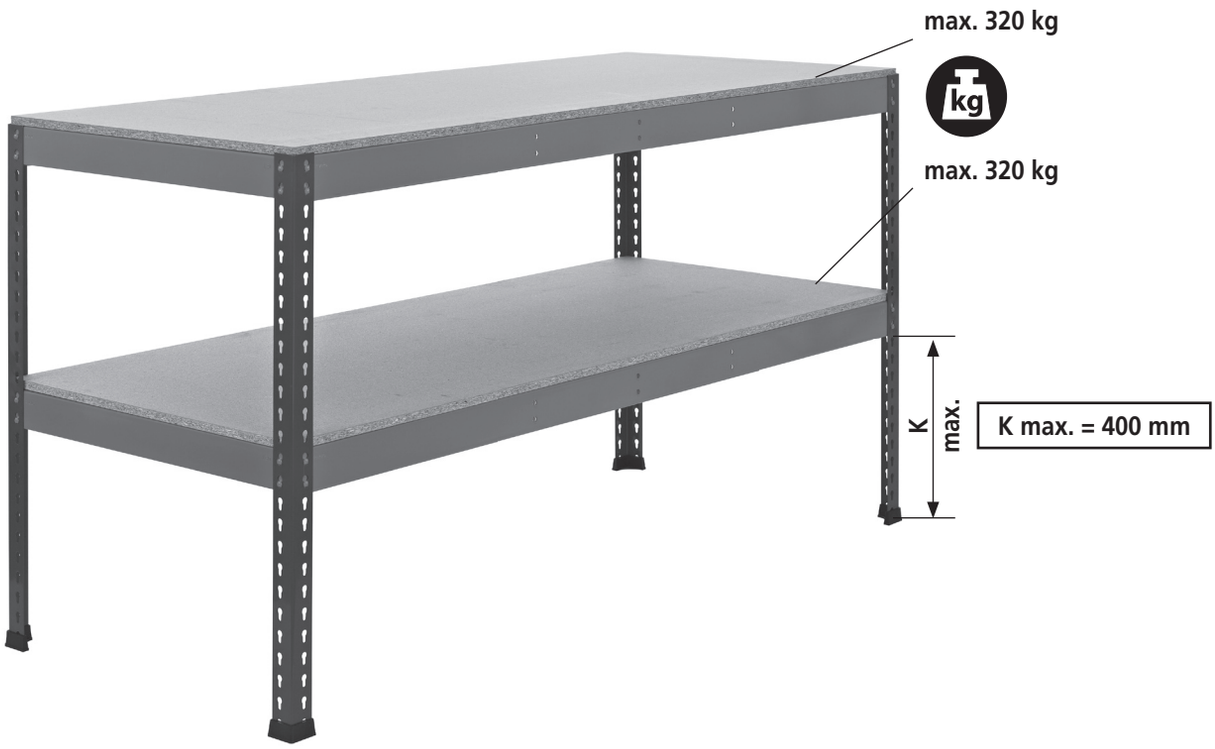

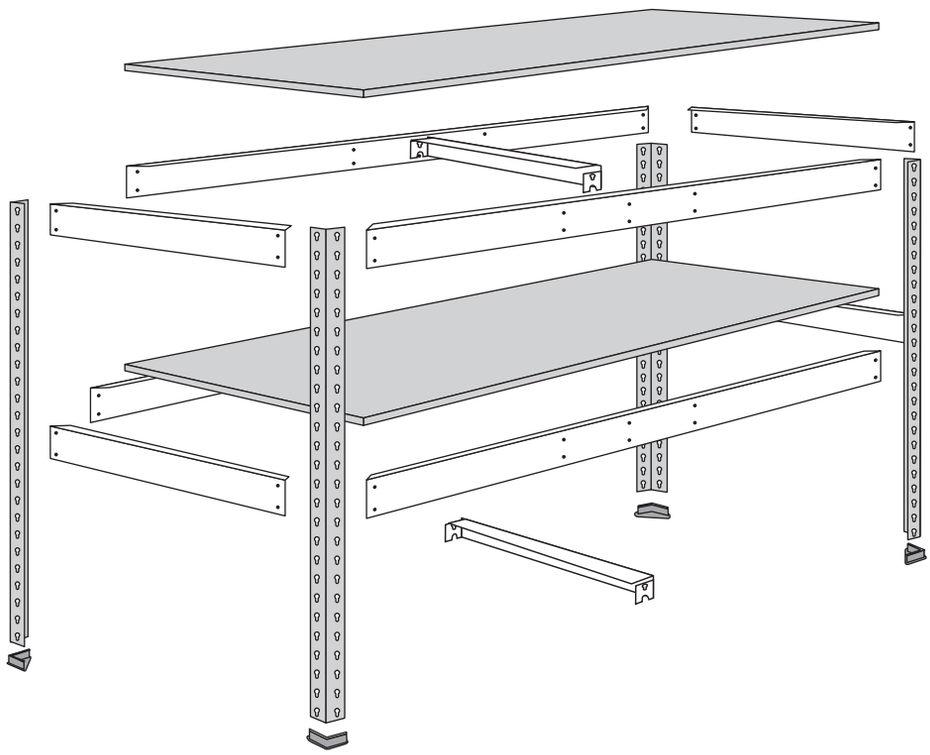

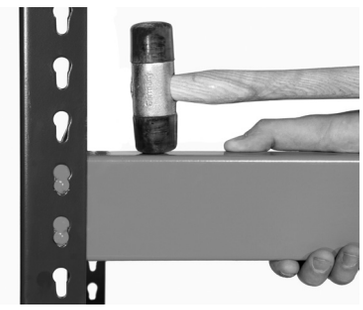

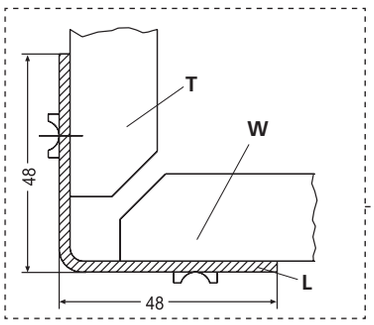
T
W
48
48
L

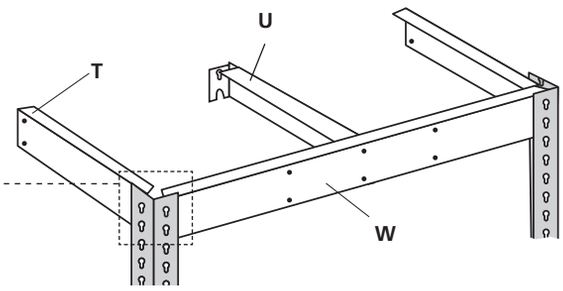
U
T
W

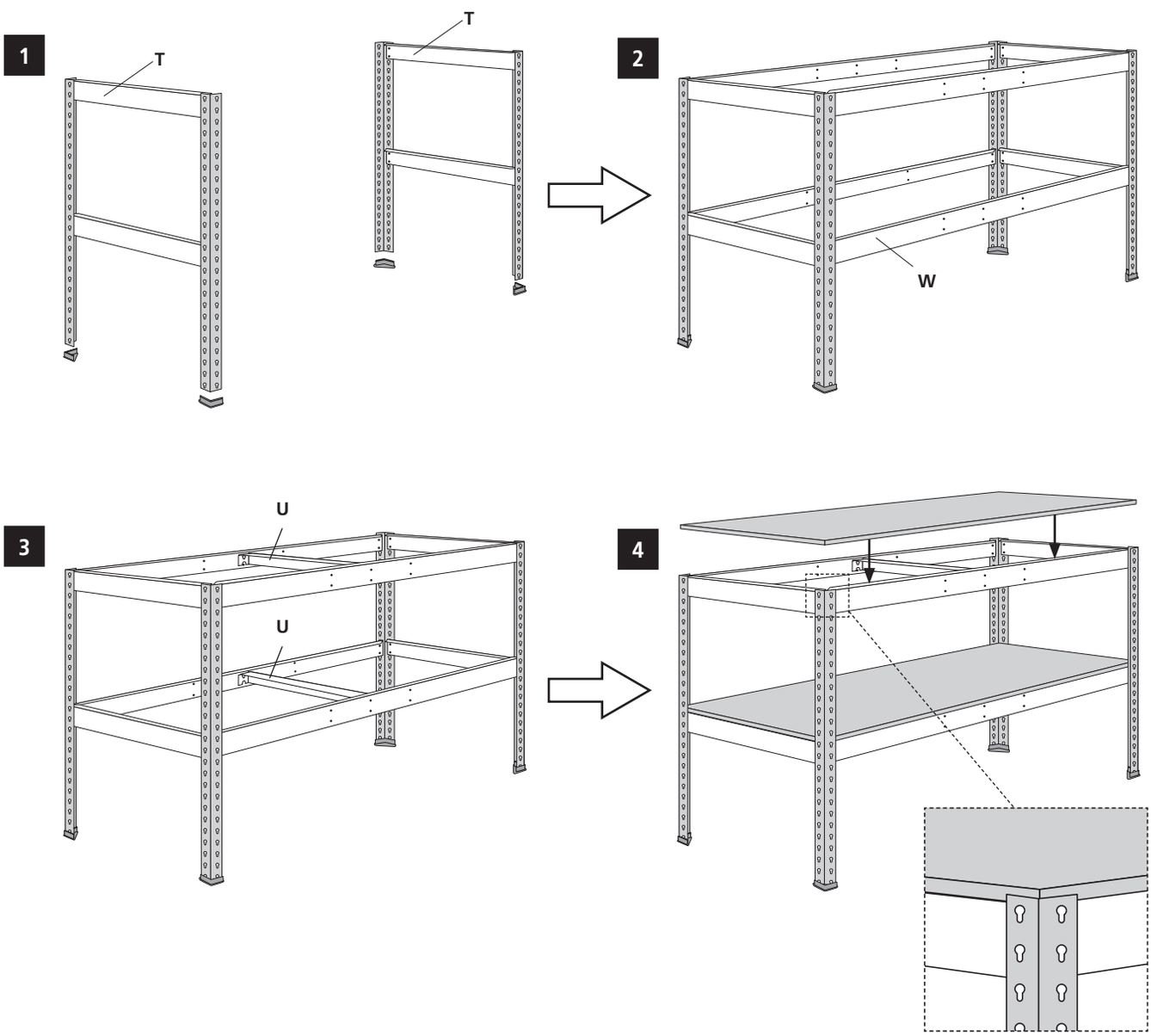
1
T
T
2
W
3
U
U
4

Z 1 - B

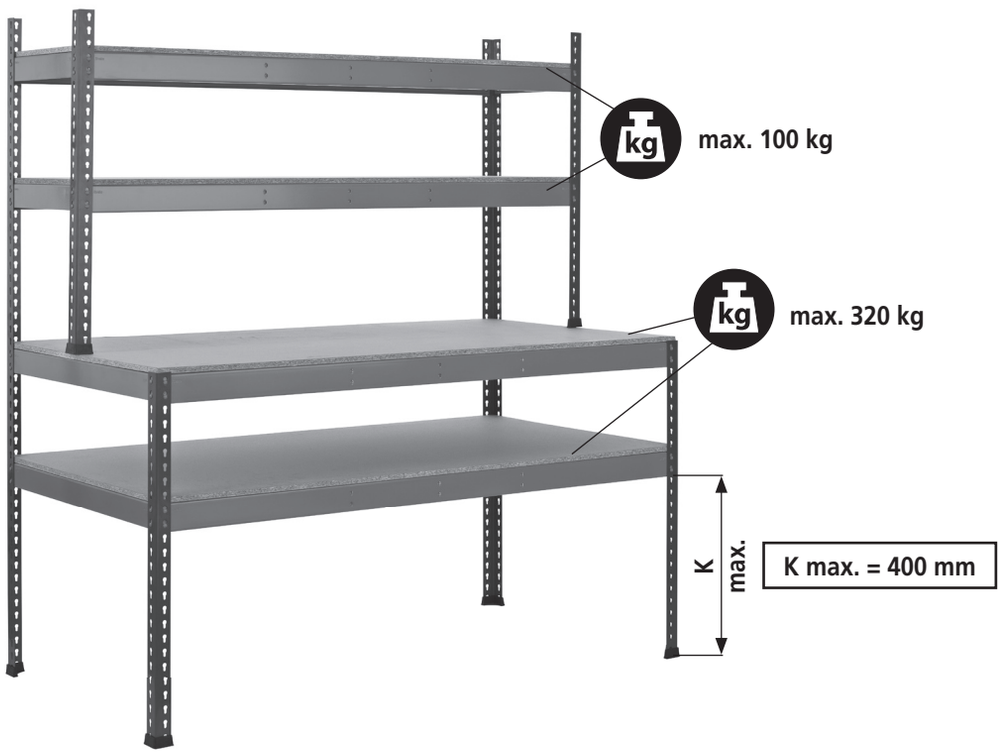

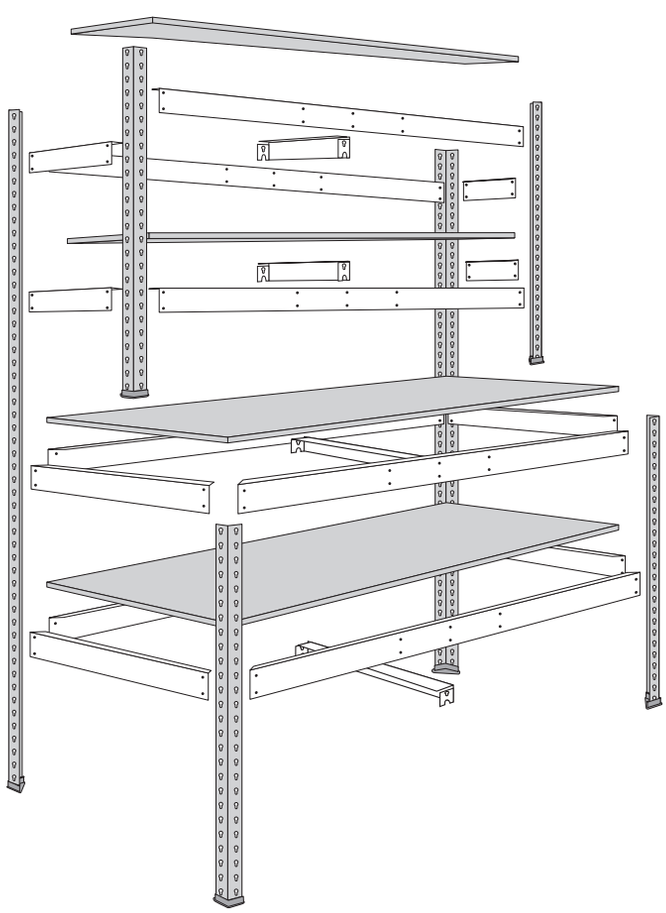

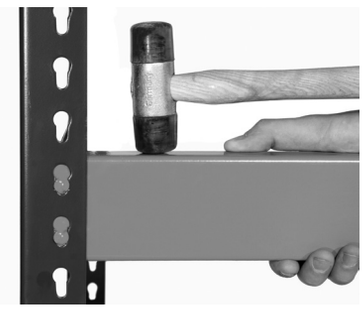

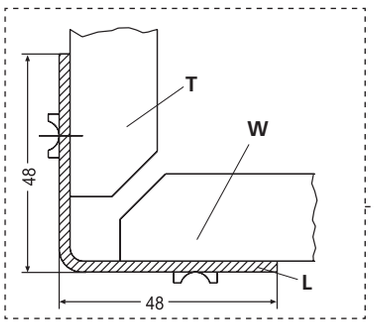
T
W
48
48
L

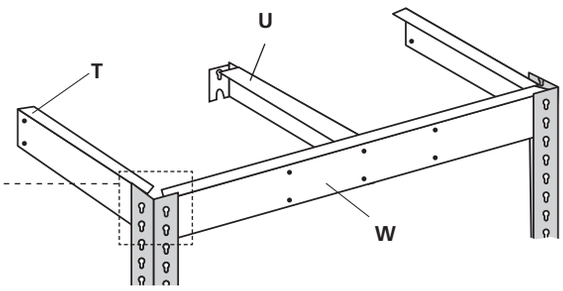
U
T
W

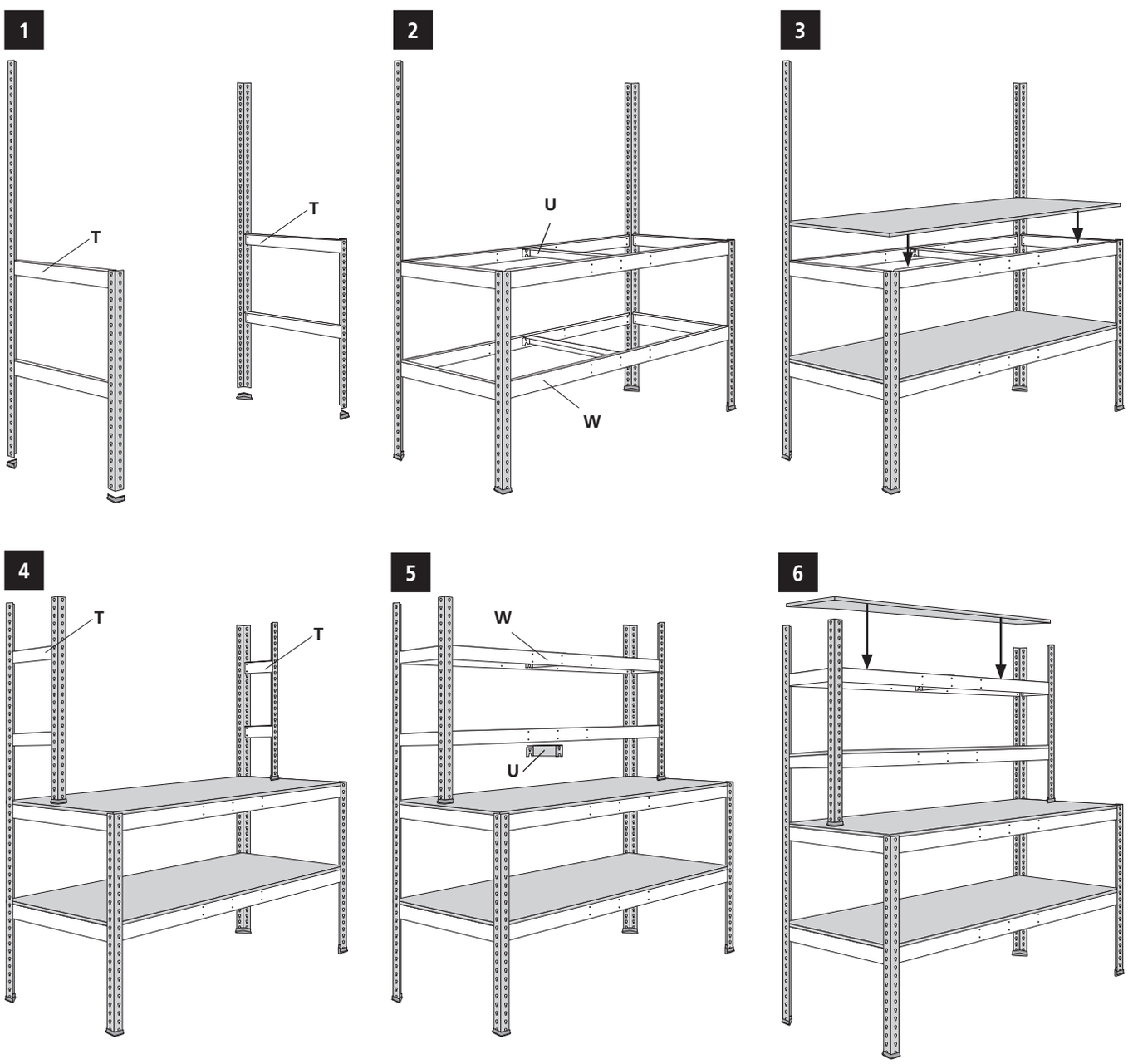
1
T
T
2
U
W
3
4
T
T
5
W
U
6

W 100

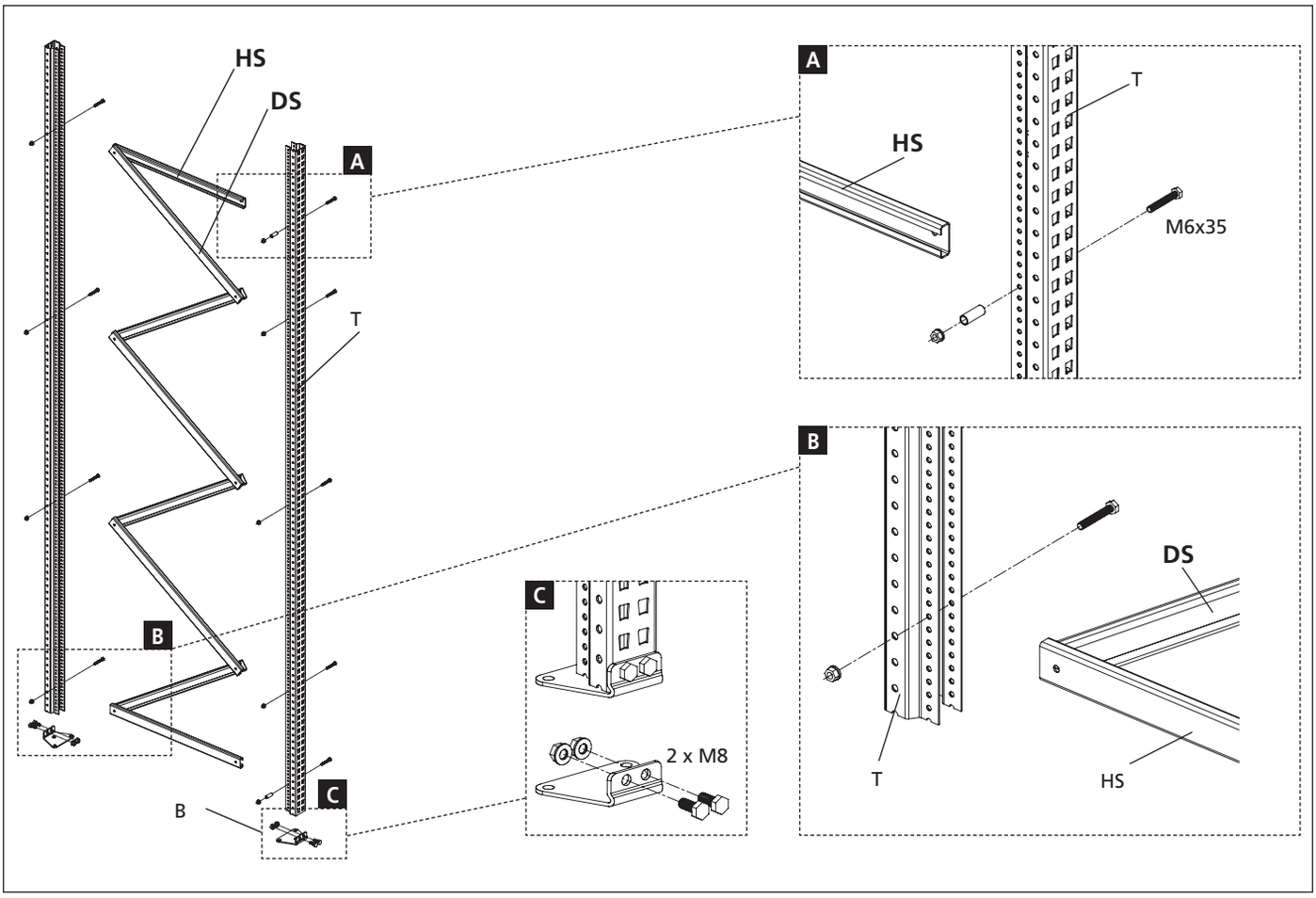

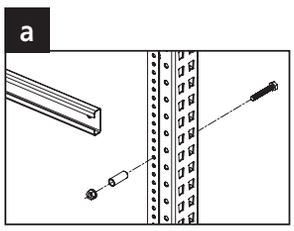

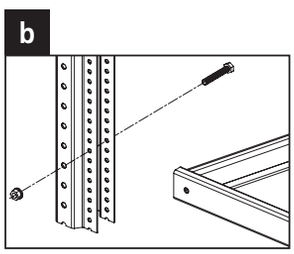

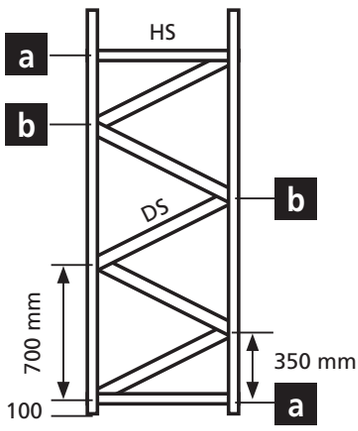

2.000 mm

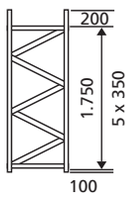

5 x DS 2 x a
2 x HS 6 x b

2.500 mm

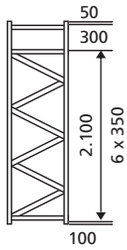

6 x DS 4 x a
3 x HS 7 x b

3.000 mm

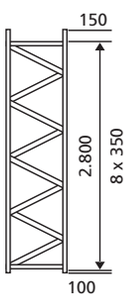

8 x DS 2 x a
2 x HS 9 x b

3.500 mm

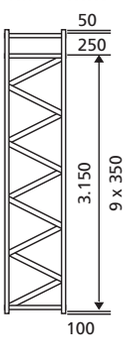

9 x DS 4 x a
3 x HS 10 x b

4.000 mm

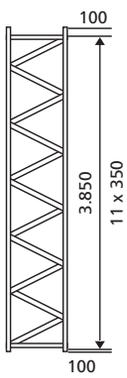

11 x DS 2 x a
2 x HS 12 x b

4.500 mm

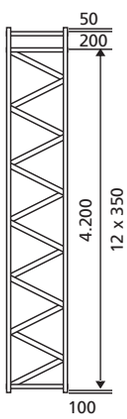

12 x DS 4 x a
3 x HS 13 x b

5.000 mm

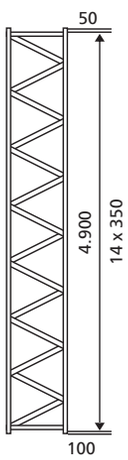

14 x DS 2 x a
2 x HS 15 x b

Q max. (kg)

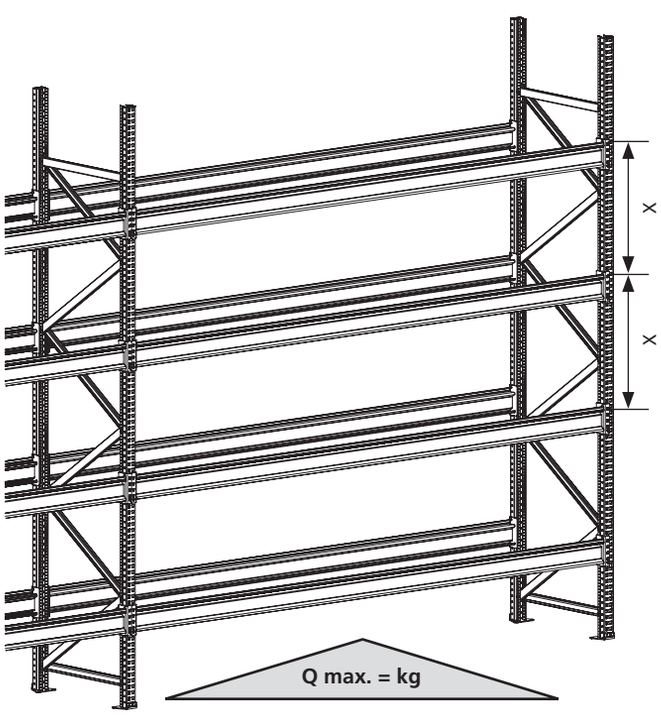

Q max. (kg)

X (mm)	Q max. (kg)
500 mm	3.500 kg
600 mm	3.430 kg
700 mm	3.350 kg
800 mm	3.200 kg
900 mm	3.080 kg
1.000 mm	3.000 kg
1.100 mm	2.800 kg
1.200 mm	2.600 kg

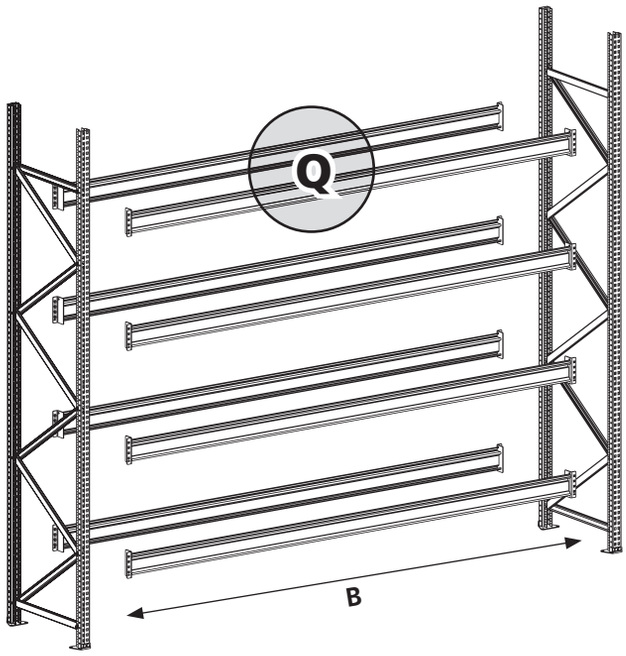

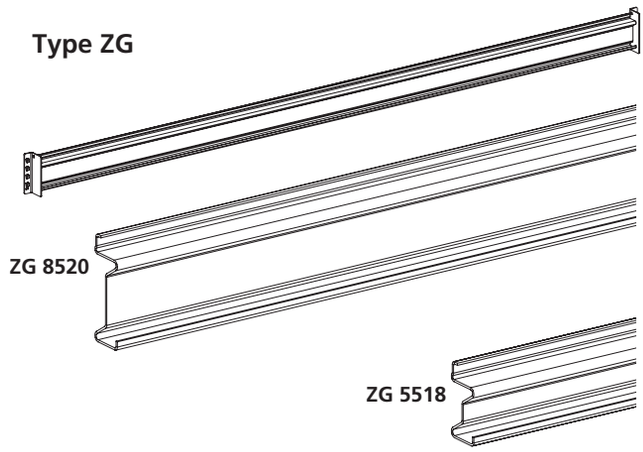

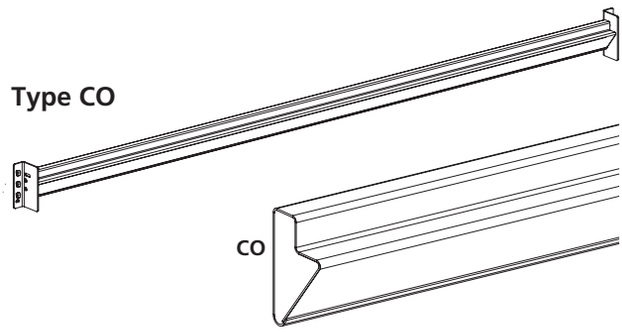

Type	B (mm)	Q (kg)
ZG 5518	1.785 mm	755 kg
ZG 8520	2.410 mm	1.595 kg
ZG 8520	2.500 mm	1.320 kg
CO	1.250 mm	538 kg
CO	1.605 mm	419 kg

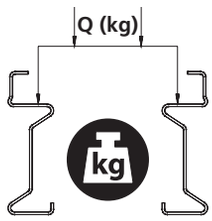

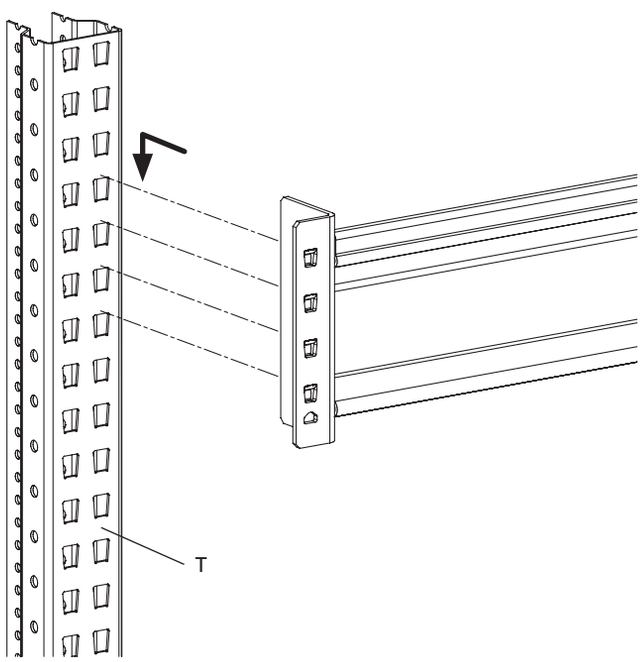

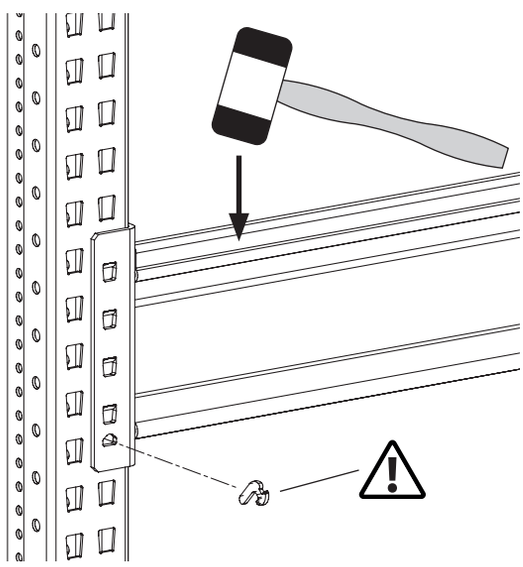

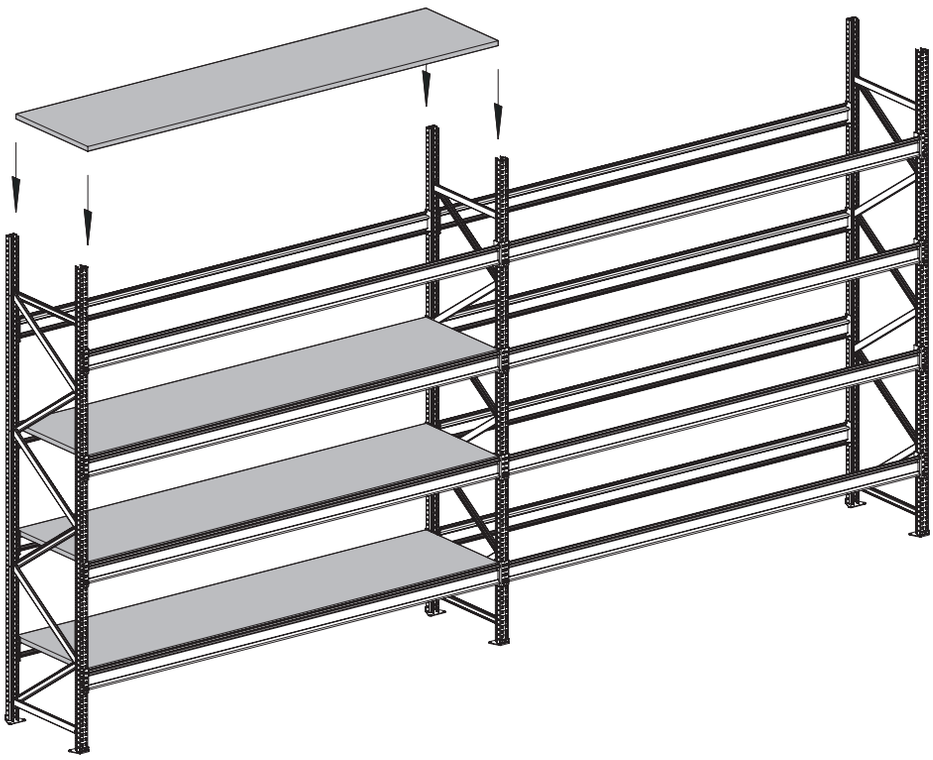

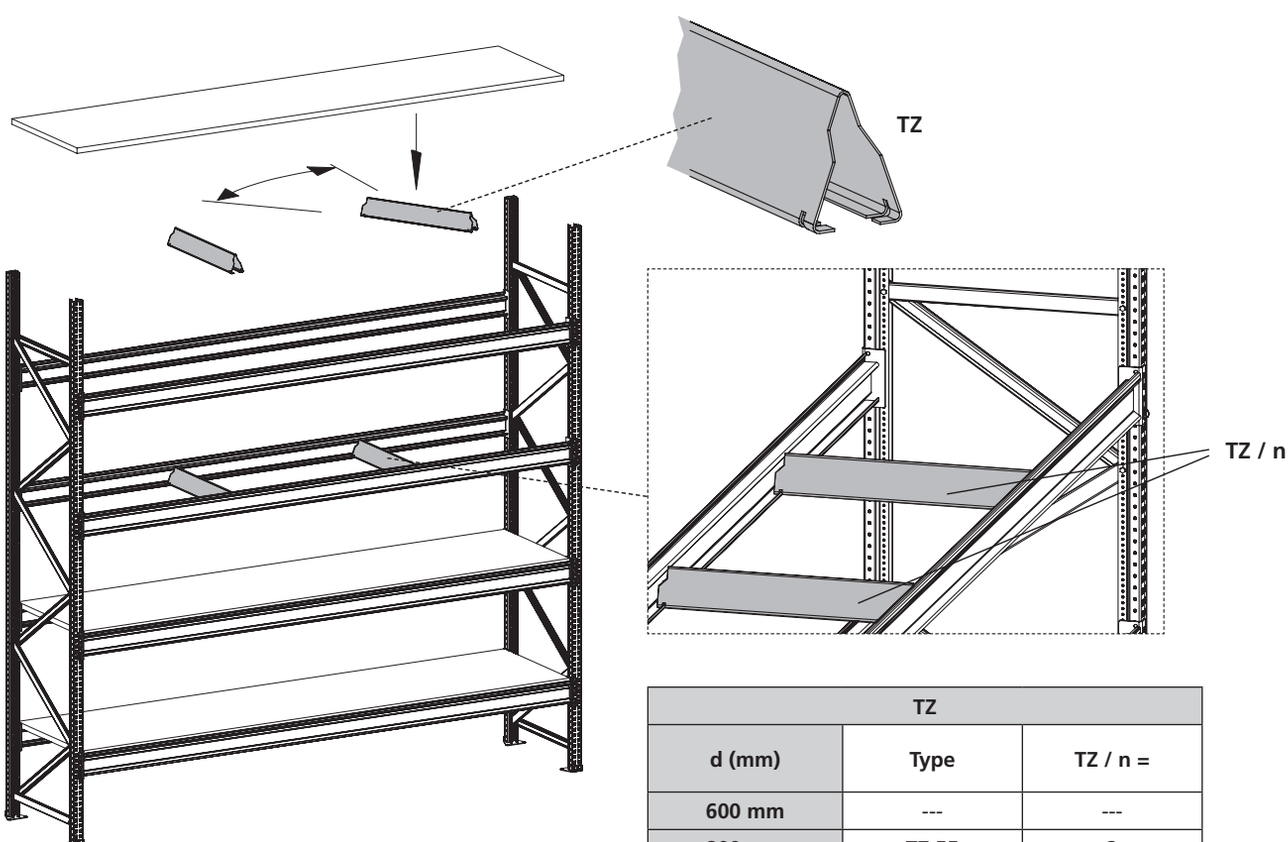

TZ		
d (mm)	Type	TZ / n =
600 mm	---	---
800 mm	TZ 55	2
800 mm	TZ 85	2
1.000 mm	TZ 55	2
1.000 mm	TZ 85	3
1.200 mm	TZ 55	3
1.200 mm	TZ 85	3

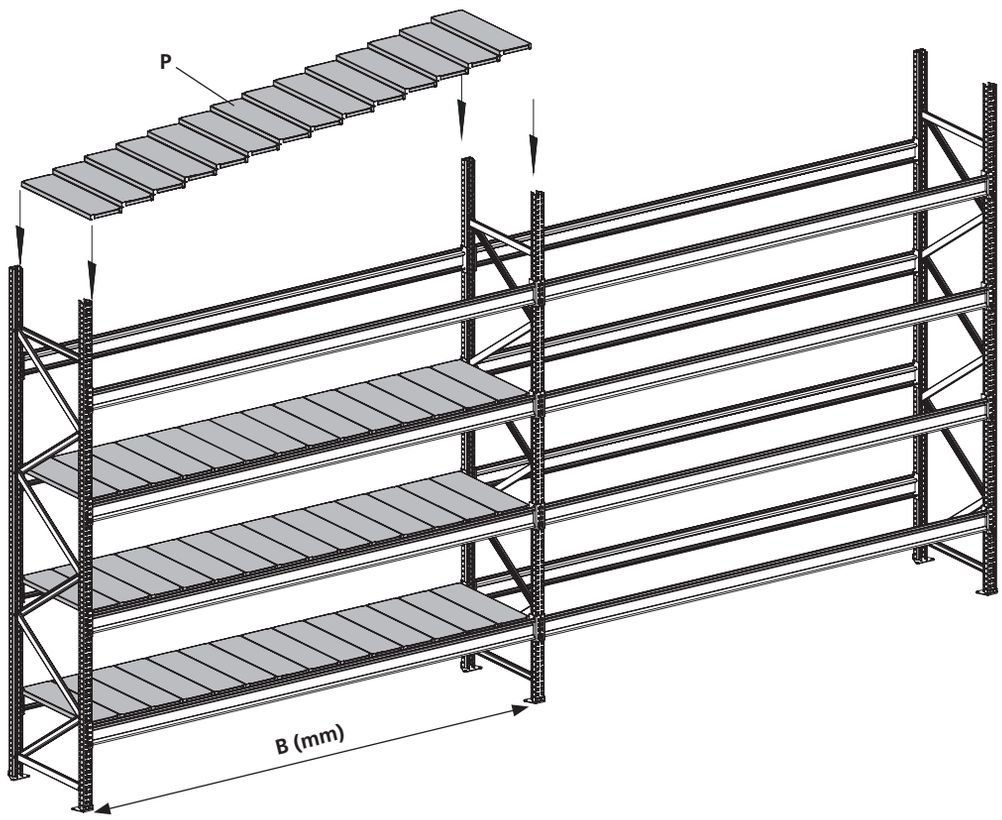

B (mm)	P / n =
1.785 mm	10
2.140 mm	12
2.500 mm	14

Art.-Nr. 13033-KK

Version 1.9 / 04.2017